SERIES 9600™

BLOCK DIAGRAMS

OEC

OEC MEDICAL SYSTEMS, INC

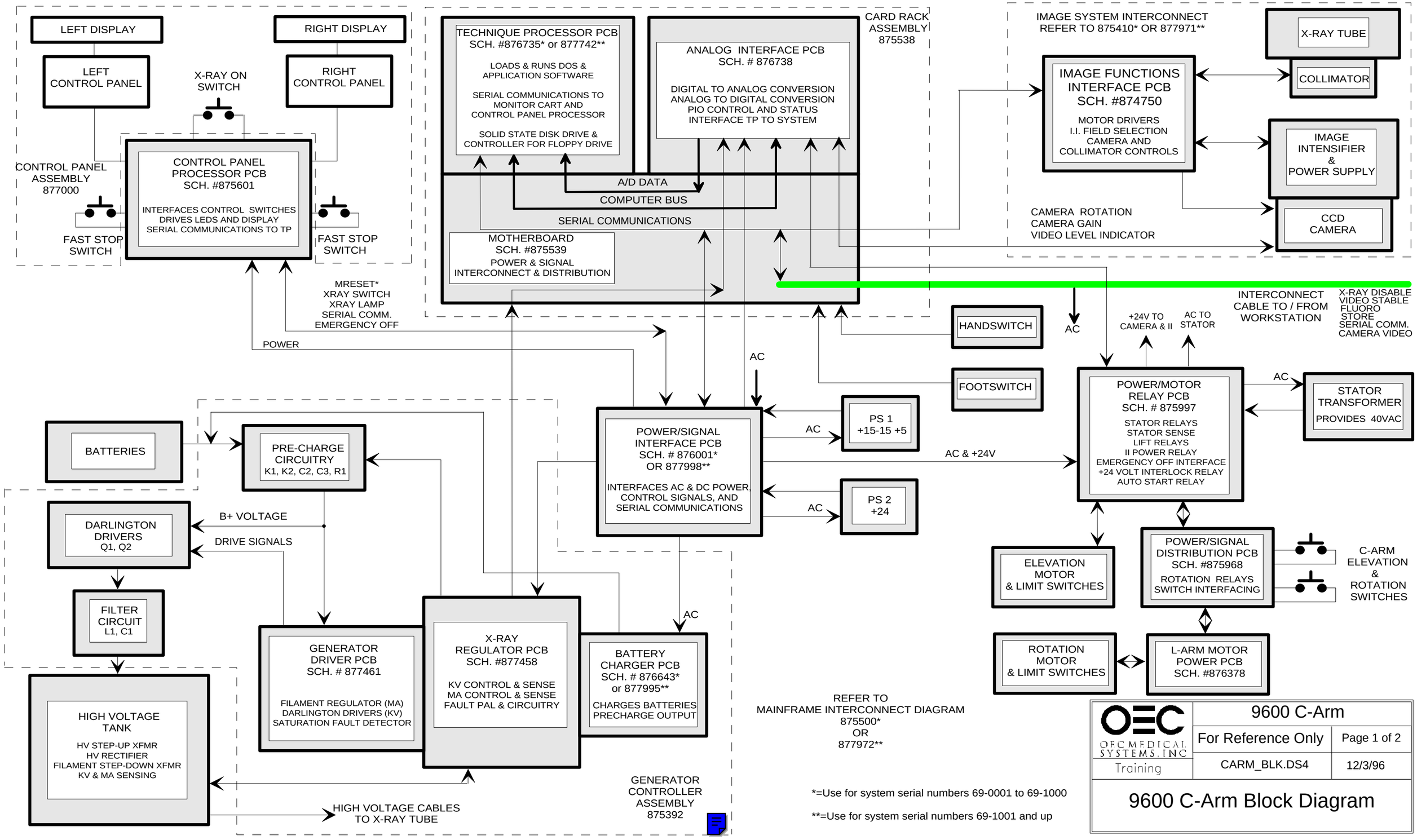
LEFT DISPLAY
RIGHT DISPLAY
LEFT CONTROL PANEL
X-RAY ON SWITCH
RIGHT CONTROL PANEL
CONTROL PANEL ASSEMBLY 877000
CONTROL PANEL PROCESSOR PCB SCH. #875601
INTERFACES CONTROL SWITCHES DRIVES LEDS AND DISPLAY SERIAL COMMUNICATIONS TO TP
FAST STOP SWITCH
FAST STOP SWITCH
TECHNIQUE PROCESSOR PCB SCH. #876735* or 877742**
LOADS & RUNS DOS & APPLICATION SOFTWARE
SERIAL COMMUNICATIONS TO MONITOR CART AND CONTROL PANEL PROCESSOR
SOLID STATE DISK DRIVE & CONTROLLER FOR FLOPPY DRIVE
ANALOG INTERFACE PCB SCH. # 876738
DIGITAL TO ANALOG CONVERSION ANALOG TO DIGITAL CONVERSION PIO CONTROL AND STATUS INTERFACE TP TO SYSTEM
CARD RACK ASSEMBLY 875538
A/D DATA
COMPUTER BUS
SERIAL COMMUNICATIONS
MOTHERBOARD SCH. #875539
POWER & SIGNAL INTERCONNECT & DISTRIBUTION
IMAGE SYSTEM INTERCONNECT REFER TO 875410* OR 877971**
X-RAY TUBE
COLLIMATOR
IMAGE FUNCTIONS INTERFACE PCB SCH. #874750
MOTOR DRIVERS I.I. FIELD SELECTION CAMERA AND COLLIMATOR CONTROLS
IMAGE INTENSIFIER & POWER SUPPLY
CCD CAMERA
CAMERA ROTATION
CAMERA GAIN
VIDEO LEVEL INDICATOR
MRESET*
XRAY SWITCH
XRAY LAMP
SERIAL COMM.
EMERGENCY OFF
POWER
HANDSWITCH
FOOTSWITCH
AC
AC
+24V TO CAMERA & II
AC TO STATOR
INTERCONNECT CABLE TO / FROM WORKSTATION
X-RAY DISABLE
VIDEO STABLE
FLUORO STORE
SERIAL COMM.
CAMERA VIDEO
POWER/SIGNAL INTERFACE PCB SCH. # 876001* OR 877998**
INTERFACES AC & DC POWER, CONTROL SIGNALS, AND SERIAL COMMUNICATIONS
AC
PS 1 +15-15 +5
AC
PS 2 +24
AC & +24V
POWER/MOTOR RELAY PCB SCH. # 875997
STATOR RELAYS
STATOR SENSE
LIFT RELAYS
II POWER RELAY
EMERGENCY OFF INTERFACE
+24 VOLT INTERLOCK RELAY
AUTO START RELAY
AC
STATOR TRANSFORMER
PROVIDES 40VAC
BATTERIES
PRE-CHARGE CIRCUITRY
K1, K2, C2, C3, R1
DARLINGTON DRIVERS
Q1, Q2
B+ VOLTAGE
DRIVE SIGNALS
FILTER CIRCUIT
L1, C1
ELEVATION MOTOR & LIMIT SWITCHES
POWER/SIGNAL DISTRIBUTION PCB SCH. #875968
ROTATION RELAYS SWITCH INTERFACING
C-ARM ELEVATION & ROTATION SWITCHES
ROTATION MOTOR & LIMIT SWITCHES
L-ARM MOTOR POWER PCB SCH. #876378
GENERATOR DRIVER PCB SCH. # 877461
FILAMENT REGULATOR (MA)
DARLINGTON DRIVERS (KV)
SATURATION FAULT DETECTOR
X-RAY REGULATOR PCB SCH. #877458
KV CONTROL & SENSE
MA CONTROL & SENSE
FAULT PAL & CIRCUITRY
AC
BATTERY CHARGER PCB SCH. # 876643* or 877995**
CHARGES BATTERIES PRECHARGE OUTPUT
HIGH VOLTAGE TANK
HV STEP-UP XFMR
HV RECTIFIER
FILAMENT STEP-DOWN XFMR
KV & MA SENSING
HIGH VOLTAGE CABLES TO X-RAY TUBE
GENERATOR CONTROLLER ASSEMBLY 875392
REFER TO MAINFRAME INTERCONNECT DIAGRAM 875500* OR 877972**
*=Use for system serial numbers 69-0001 to 69-1000
**=Use for system serial numbers 69-1001 and up
OEC
OFC MEDICAL SYSTEMS, INC
Training
9600 C-Arm
For Reference Only
Page 1 of 2
CARM_BLK.DS4
12/3/96
9600 C-Arm Block Diagram

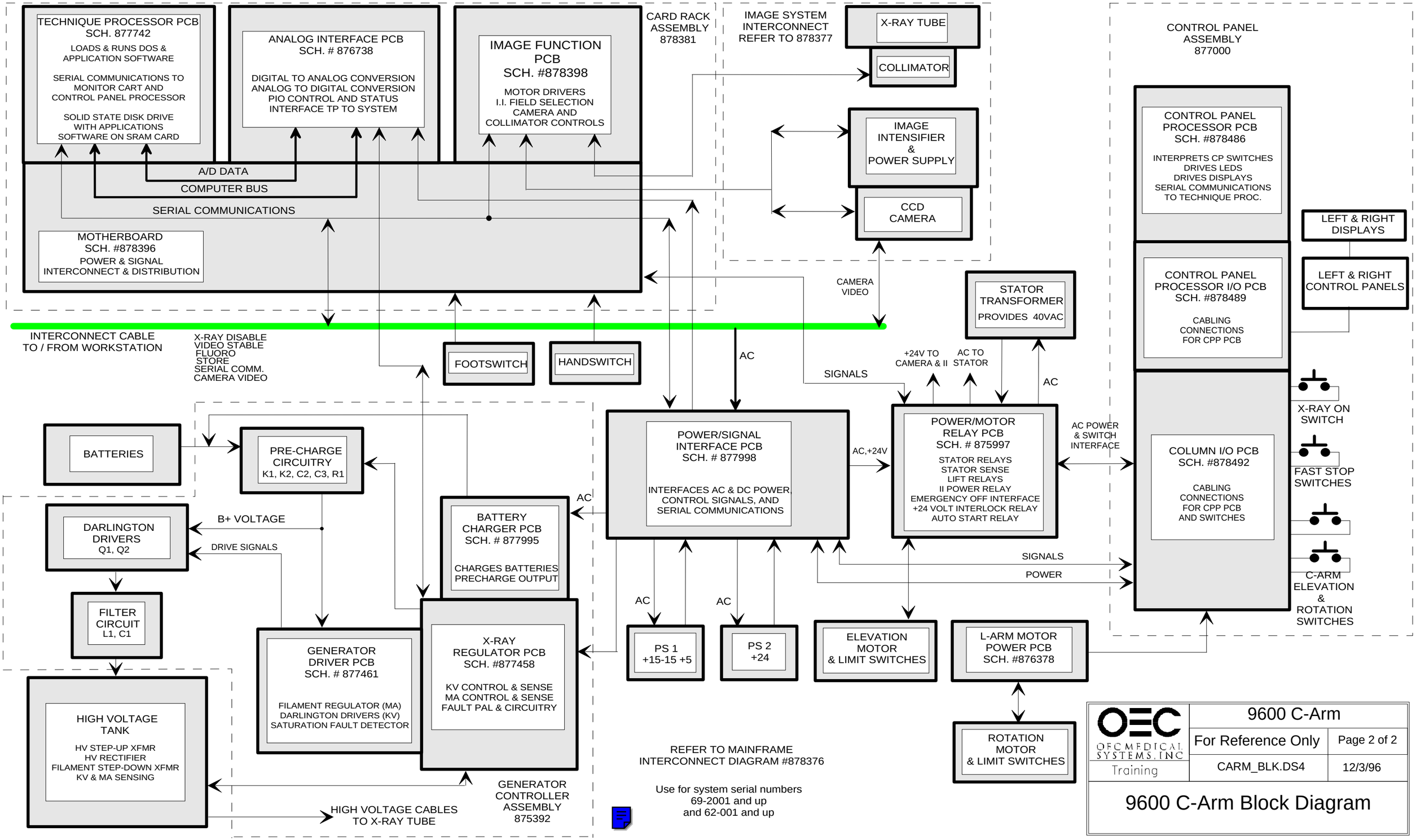
TECHNIQUE PROCESSOR PCB
SCH. 877742
LOADS & RUNS DOS & APPLICATION SOFTWARE
SERIAL COMMUNICATIONS TO MONITOR CART AND CONTROL PANEL PROCESSOR
SOLID STATE DISK DRIVE WITH APPLICATIONS SOFTWARE ON SRAM CARD
ANALOG INTERFACE PCB
SCH. # 876738
DIGITAL TO ANALOG CONVERSION
ANALOG TO DIGITAL CONVERSION
PIO CONTROL AND STATUS
INTERFACE TP TO SYSTEM
IMAGE FUNCTION PCB
SCH. #878398
MOTOR DRIVERS
I.I. FIELD SELECTION
CAMERA AND COLLIMATOR CONTROLS
CARD RACK ASSEMBLY
878381
A/D DATA
COMPUTER BUS
SERIAL COMMUNICATIONS
MOTHERBOARD
SCH. #878396
POWER & SIGNAL INTERCONNECT & DISTRIBUTION
IMAGE SYSTEM INTERCONNECT REFER TO 878377
X-RAY TUBE
COLLIMATOR
IMAGE INTENSIFIER & POWER SUPPLY
CCD CAMERA
CAMERA VIDEO
STATOR TRANSFORMER
PROVIDES 40VAC
INTERCONNECT CABLE TO / FROM WORKSTATION
X-RAY DISABLE
VIDEO STABLE
FLUORO STORE
SERIAL COMM.
CAMERA VIDEO
FOOTSWITCH
HANDSWITCH
AC
SIGNALS
+24V TO CAMERA & II
AC TO STATOR
AC
CONTROL PANEL ASSEMBLY
877000
CONTROL PANEL PROCESSOR PCB
SCH. #878486
INTERPRETS CP SWITCHES
DRIVES LEDS
DRIVES DISPLAYS
SERIAL COMMUNICATIONS TO TECHNIQUE PROC.
LEFT & RIGHT DISPLAYS
CONTROL PANEL PROCESSOR I/O PCB
SCH. #878489
CABLING CONNECTIONS FOR CPP PCB
LEFT & RIGHT CONTROL PANELS
X-RAY ON SWITCH
FAST STOP SWITCHES
C-ARM ELEVATION & ROTATION SWITCHES
BATTERIES
PRE-CHARGE CIRCUITRY
K1, K2, C2, C3, R1
POWER/SIGNAL INTERFACE PCB
SCH. # 877998
INTERFACES AC & DC POWER, CONTROL SIGNALS, AND SERIAL COMMUNICATIONS
AC,+24V
POWER/MOTOR RELAY PCB
SCH. # 875997
STATOR RELAYS
STATOR SENSE
LIFT RELAYS
II POWER RELAY
EMERGENCY OFF INTERFACE
+24 VOLT INTERLOCK RELAY
AUTO START RELAY
AC POWER & SWITCH INTERFACE
COLUMN I/O PCB
SCH. #878492
CABLING CONNECTIONS FOR CPP PCB AND SWITCHES
DARLINGTON DRIVERS
Q1, Q2
B+ VOLTAGE
DRIVE SIGNALS
BATTERY CHARGER PCB
SCH. # 877995
CHARGES BATTERIES
PRECHARGE OUTPUT
AC
SIGNALS
POWER
FILTER CIRCUIT
L1, C1
AC
AC
PS 1
+15-15 +5
PS 2
+24
ELEVATION MOTOR & LIMIT SWITCHES
L-ARM MOTOR POWER PCB
SCH. #876378
GENERATOR DRIVER PCB
SCH. # 877461
FILAMENT REGULATOR (MA)
DARLINGTON DRIVERS (KV)
SATURATION FAULT DETECTOR
X-RAY REGULATOR PCB
SCH. #877458
KV CONTROL & SENSE
MA CONTROL & SENSE
FAULT PAL & CIRCUITRY
HIGH VOLTAGE TANK
HV STEP-UP XFMR
HV RECTIFIER
FILAMENT STEP-DOWN XFMR
KV & MA SENSING
HIGH VOLTAGE CABLES TO X-RAY TUBE
GENERATOR CONTROLLER ASSEMBLY
875392
REFER TO MAINFRAME INTERCONNECT DIAGRAM #878376
Use for system serial numbers
69-2001 and up
and 62-001 and up
ROTATION MOTOR & LIMIT SWITCHES
OEC MEDICAL SYSTEMS, INC
Training
9600 C-Arm
For Reference Only
Page 2 of 2
CARM_BLK.DS4
12/3/96
9600 C-Arm Block Diagram

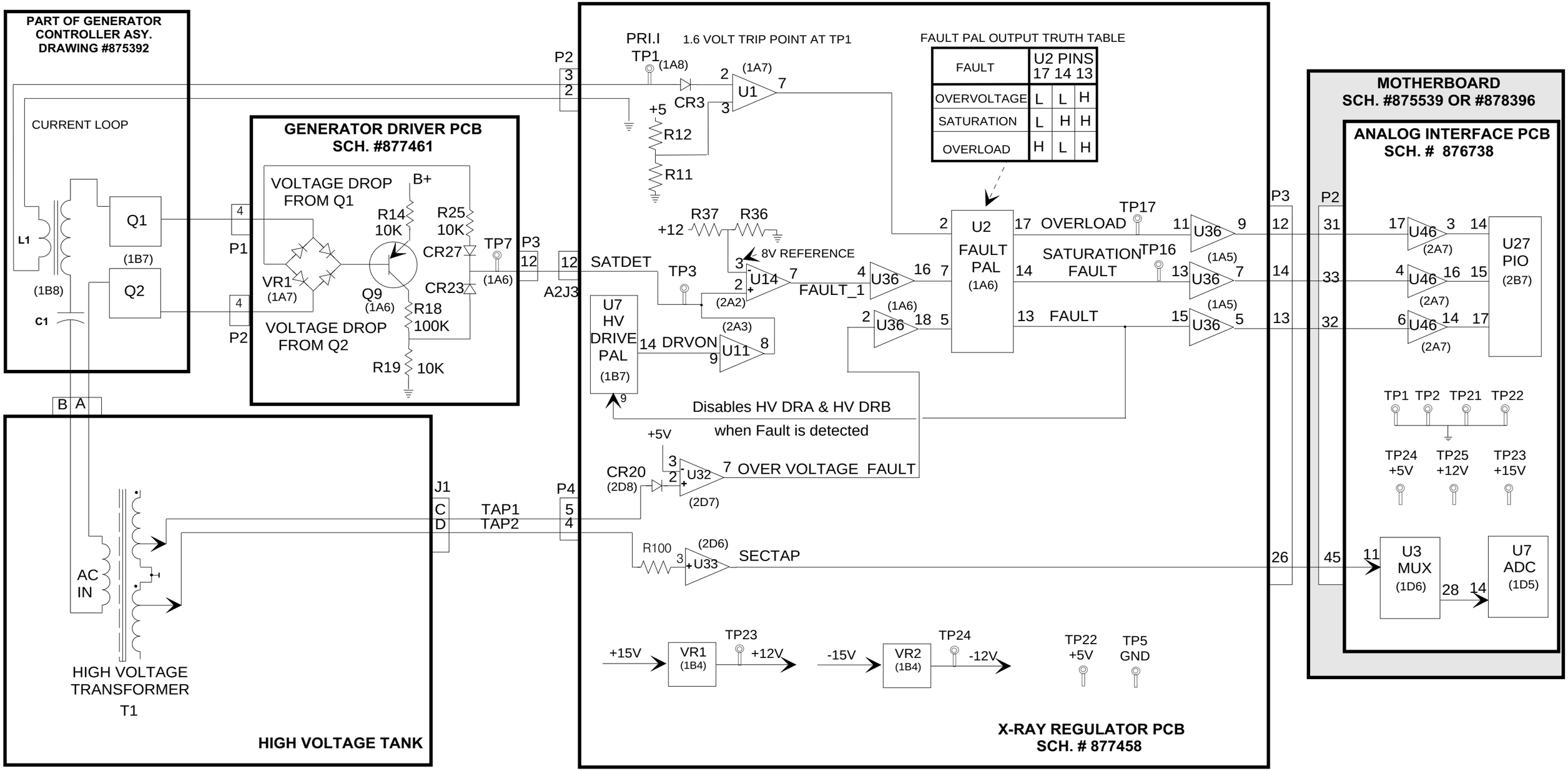

FAULT	U2 PINS 17	14	13
OVERVOLTAGE	L	L	H
SATURATION	L	H	H
OVERLOAD	H	L	H

OEC MEDICAL SYSTEMS, INC Training	9600 C-ARM	
	For Reference Only	Page 1 of 1
	96FAULTS.DS4	12/4/96

GENERATOR KV CIRCUIT FAULTS FUNCTIONAL DIAGRAM

9600 Digital Mobile C-Arm - Generator Block Diagrams, Test Points, and Signal Waveforms

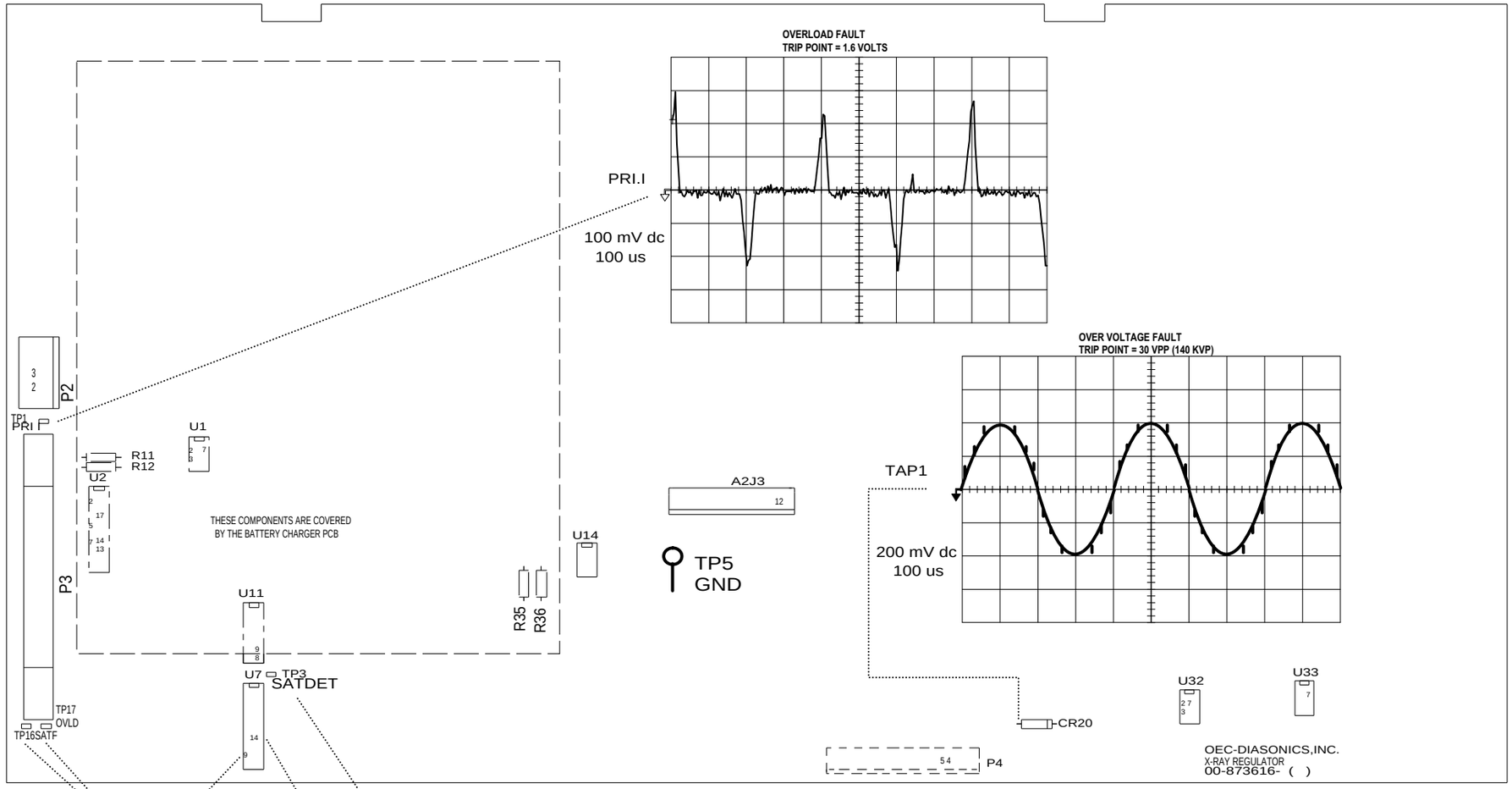

Test Conditions

In the manual fluoro mode, use a technique of 50 kV and 1 mA for the majority of this lab.

Other kV settings will be useful for observing a change in DC voltages. Note these unique kV settings on this worksheet for future reference.

The waveforms represent normal X-ray on conditions at 50 KV @ 1 ma.

FAULT PAL OUTPUT TRUTH TABLE

FAULT PAL U2 OUTPUTS	TP17	TP16	U7 PIN 9
OVERVOLTAGE			H
SATURATION		H	H
OVERLOAD	H		H

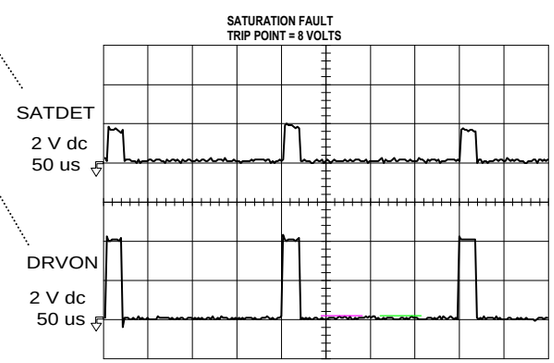

OEC MEDICAL SYSTEMS, INC Training	9600 GENERATOR	
	Page 1 of 1	
	96FLT_SS.DS4	8-21-96
9600 GENERATOR FAULTS WORKSHEET		

9600 Mobile Digital C-Arm - Generator Block Diagrams, Test Points, and Waveforms

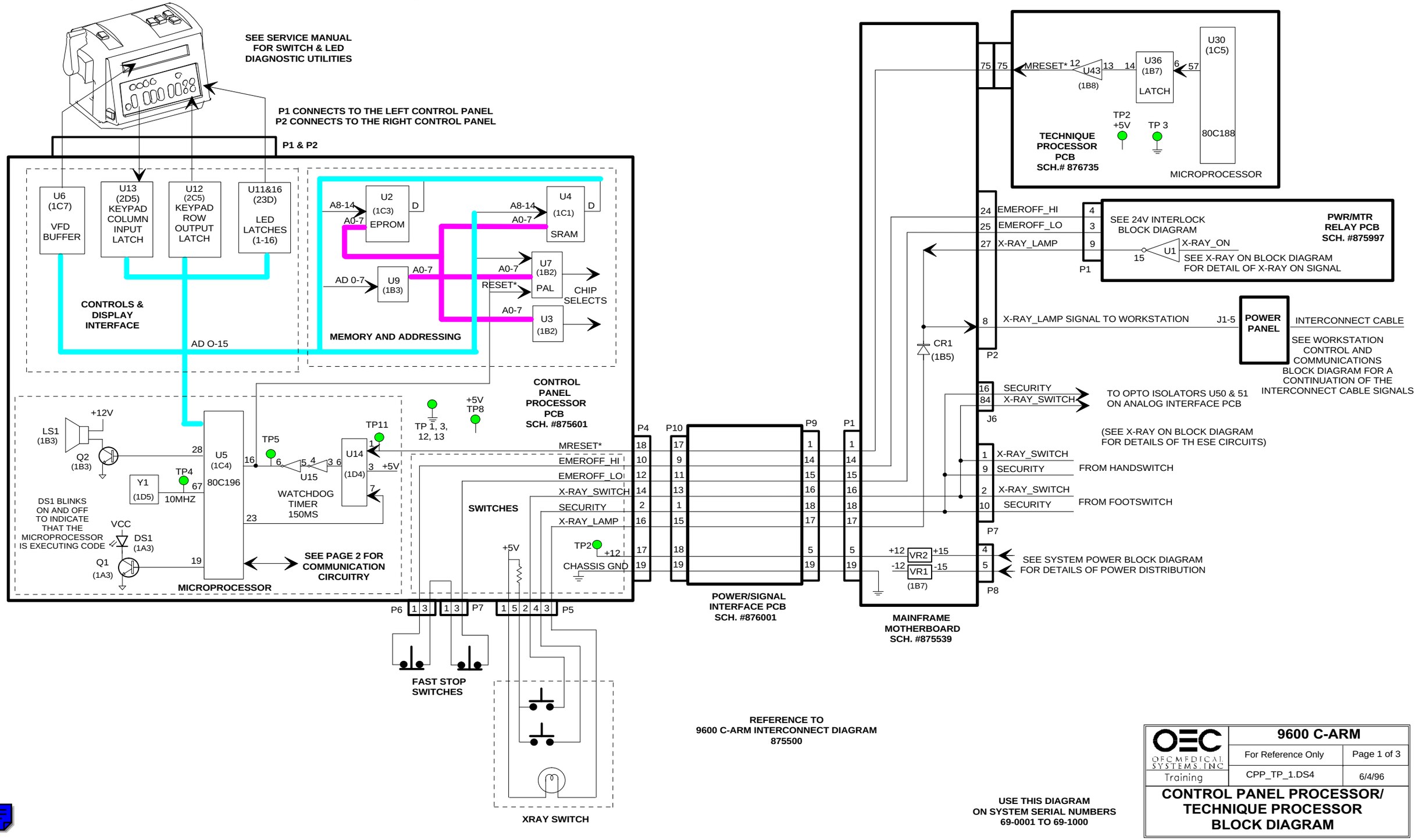

9600 Mobile Digital C-Arm - Generator Block Diagrams, Test Points, and Waveforms

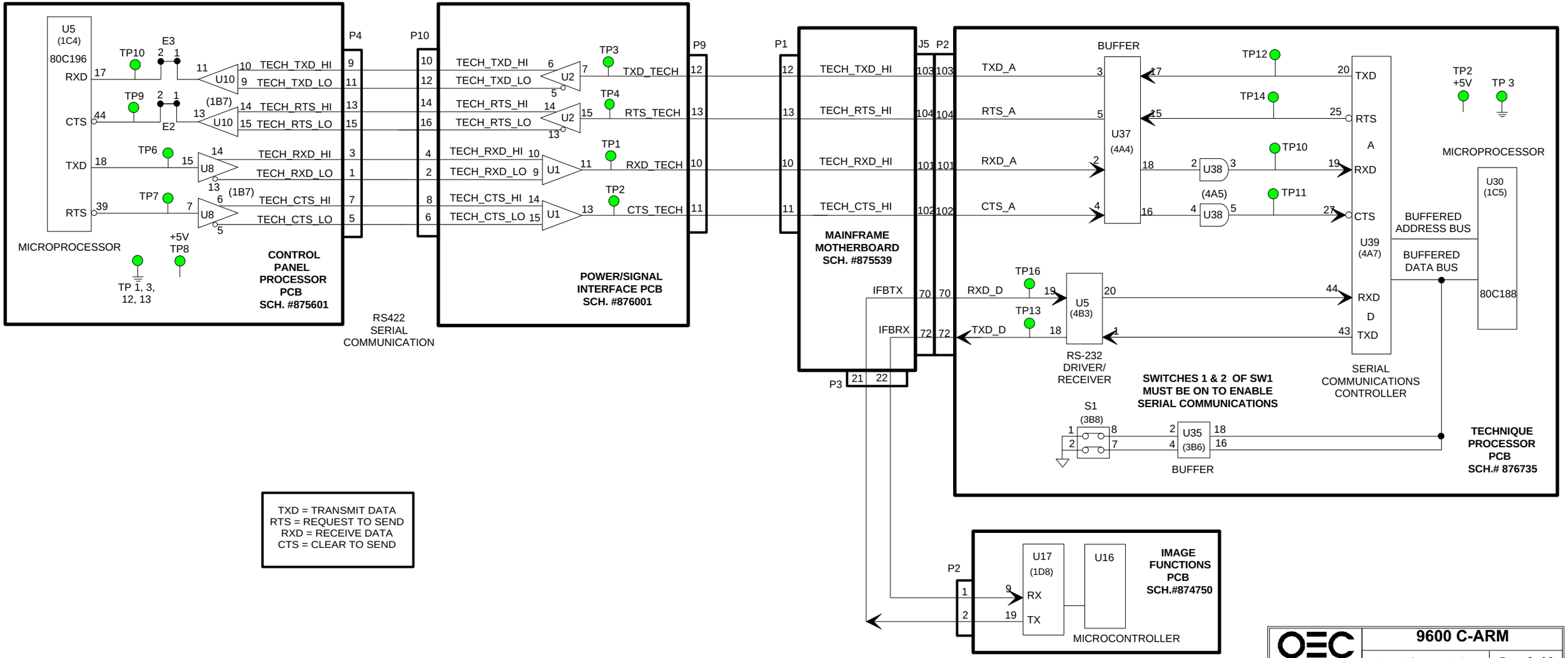

USE THIS DIAGRAM ON SYSTEM SERIAL NUMBERS 69-0001 TO 69-1000

OEC MEDICAL SYSTEMS, INC Training	9600 C-ARM	
	For Reference Only	Page 2 of 3
	CPP_TP_1.DS4	6/4/96

C-ARM COMMUNICATIONS BLOCK DIAGRAM

9600 Digital Mobile C-Arm - Generator Block Diagrams, Test Points, and Signal Waveforms

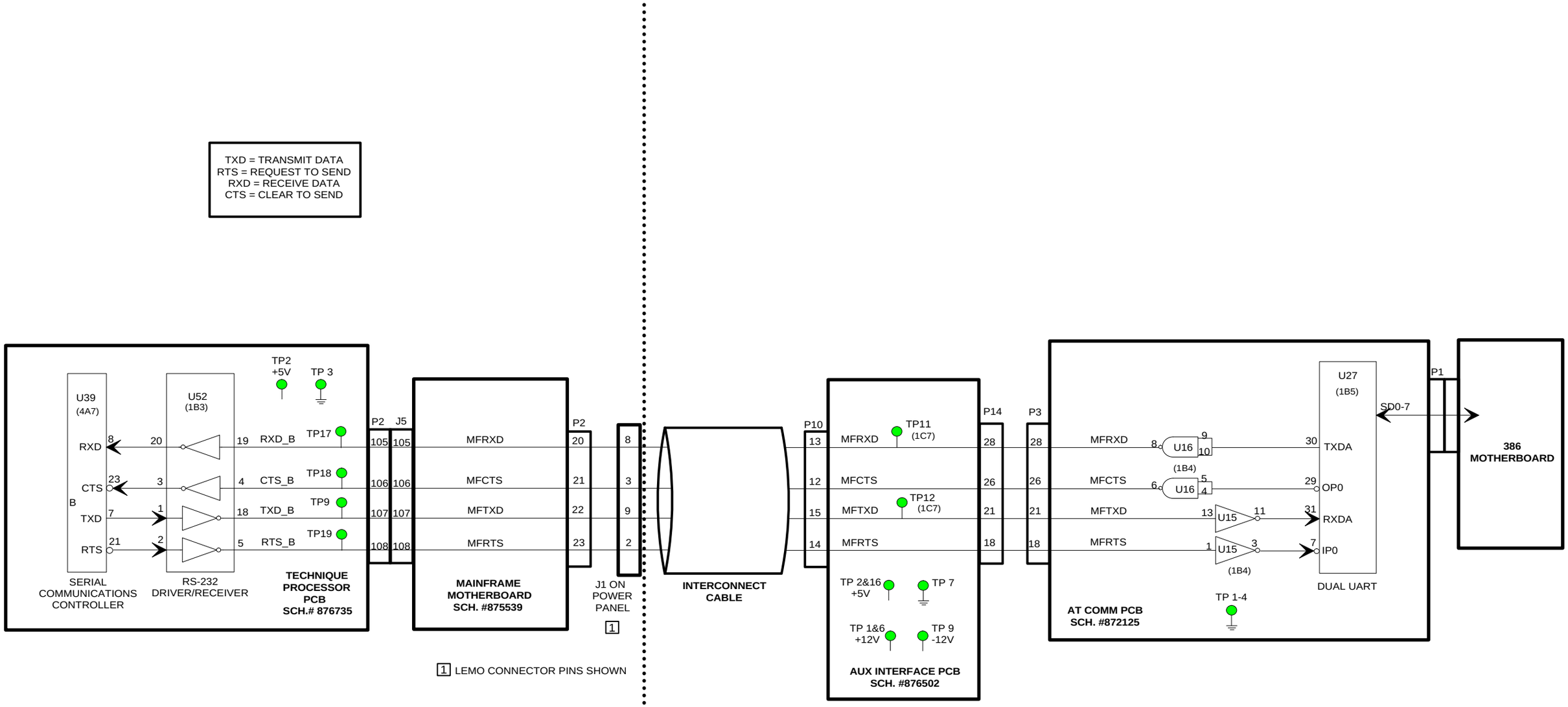

C-ARM

REFERENCE TO
MAINRAME INTERCONNECT DIAGRAM
#875500

WORKSTATI0N

REFERENCE TO
9600 WORKSTATION INTERCONNECT DIAGRAM
#876158

USE THIS DIAGRAM
ON SYSTEM SERIAL NUMBERS
69-0001 TO 69-1000

OEC OF C MEDICAL SYSTEMS, INC Training	9600 C-ARM	
	For Reference Only	Page 3 of 3
	CPP_TP_1.DS4	6/4/96
WORKSTATION / C-ARM COMMUNICATIONS BLOCK DIAGRAM		

9600 Digital Mobile C-Arm - Generator Block Diagrams, Test Points, and Signal Waveforms

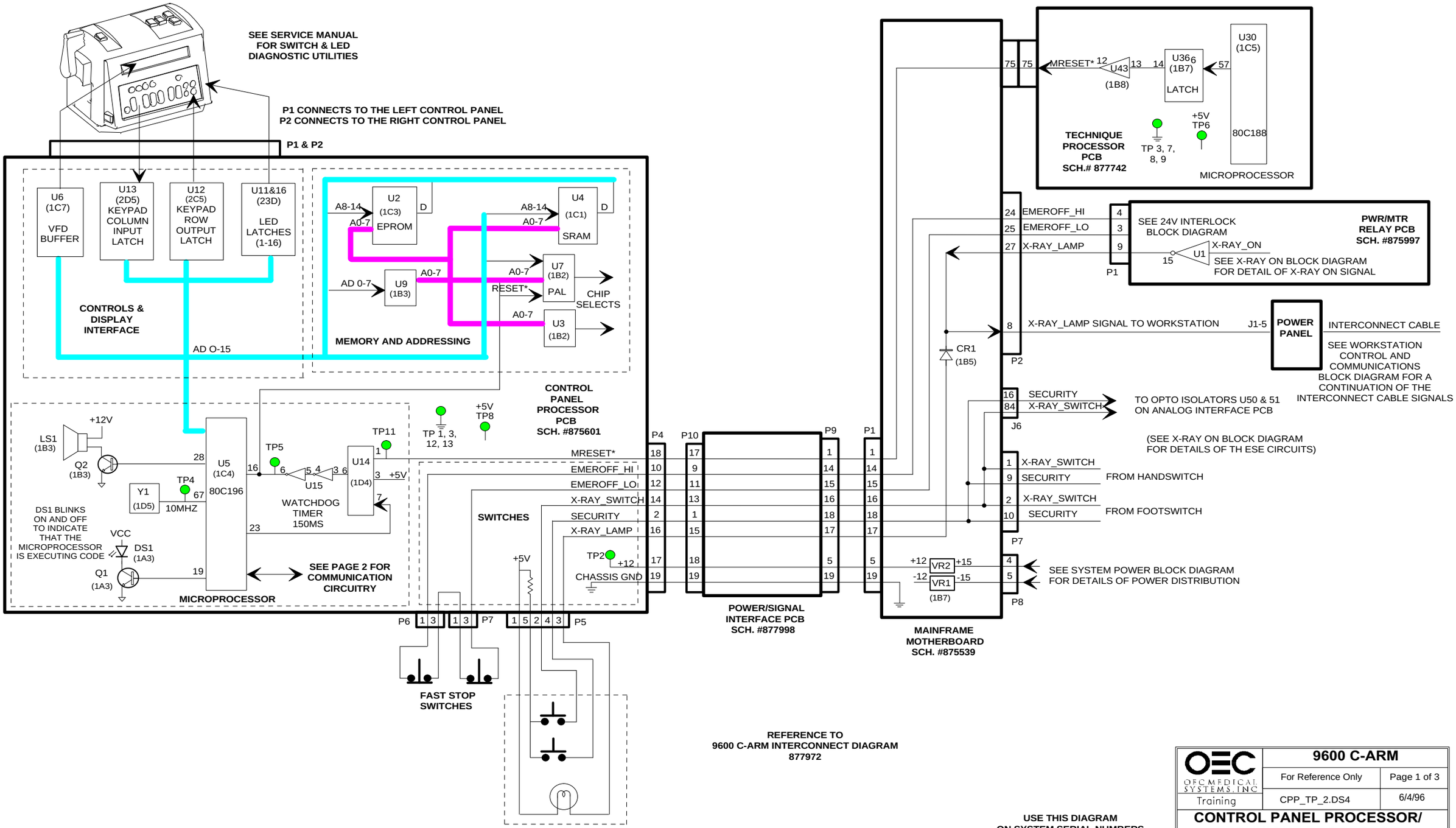

9600 Mobile Digital C-Arm - Generator Block Diagrams, Test Points, and Waveforms

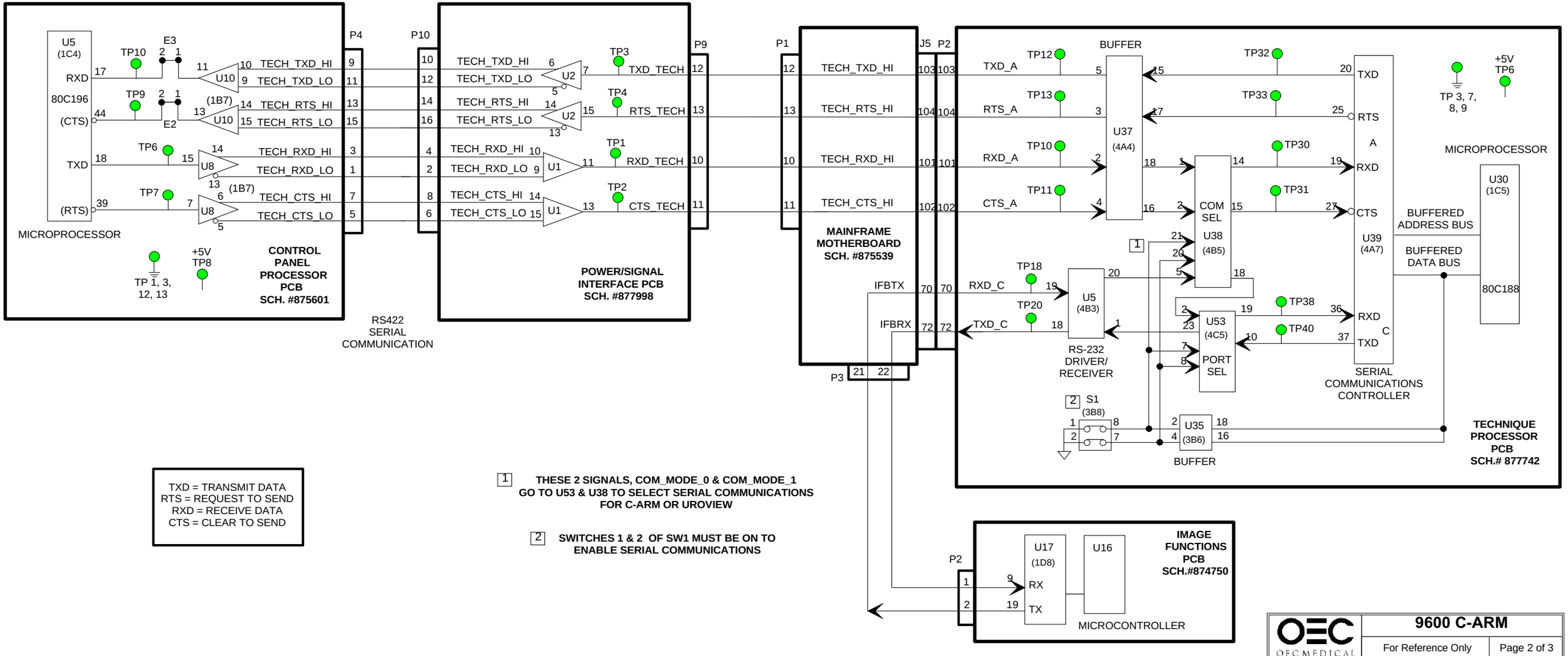

TXD = TRANSMIT DATA
RTS = REQUEST TO SEND
RXD = RECEIVE DATA
CTS = CLEAR TO SEND

1 THESE 2 SIGNALS, COM_MODE_0 & COM_MODE_1 GO TO U53 & U38 TO SELECT SERIAL COMMUNICATIONS FOR C-ARM OR UROVIEW

2 SWITCHES 1 & 2 OF SW1 MUST BE ON TO ENABLE SERIAL COMMUNICATIONS

USE THIS DIAGRAM ON SYSTEM SERIAL NUMBERS 69-1001 TO 69-2000

OEC OF C-M MEDICAL SYSTEMS, INC Training	9600 C-ARM	
	For Reference Only	Page 2 of 3
	CPP_TP_2.DS4	6/4/96

C-ARM COMMUNICATIONS BLOCK DIAGRAM

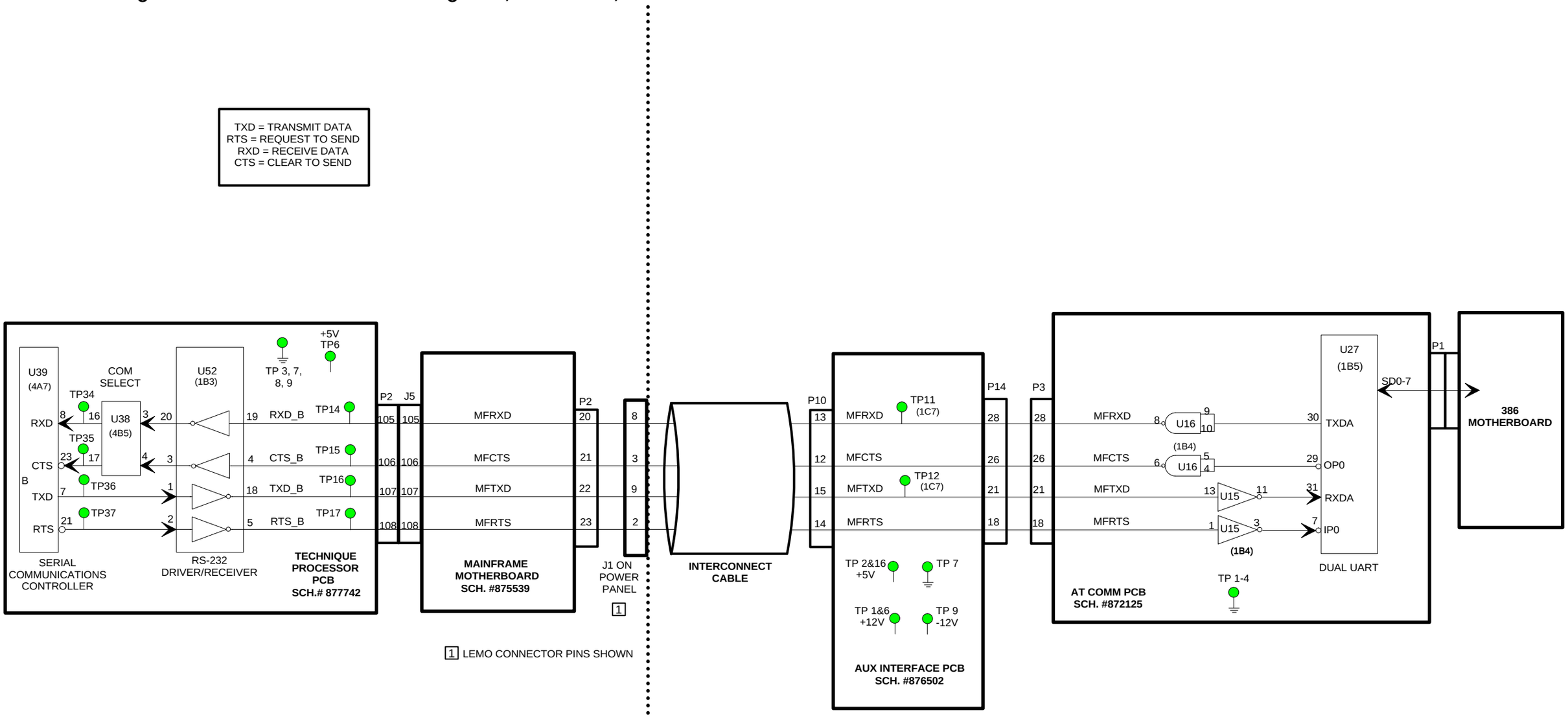

USE THIS DIAGRAM ON SYSTEM SERIAL NUMBERS 69-1001 AND UP

OEC MEDICAL SYSTEMS, INC Training	9600 C-ARM	
	For Reference Only	Page 3 of 3
	CPP_TP_2.DS4	6/4/96
WORKSTATION / C-ARM COMMUNICATIONS BLOCK DIAGRAM		

9600 Mobile Digital C-Arm - Generator Block Diagrams, Test Points, and Waveforms

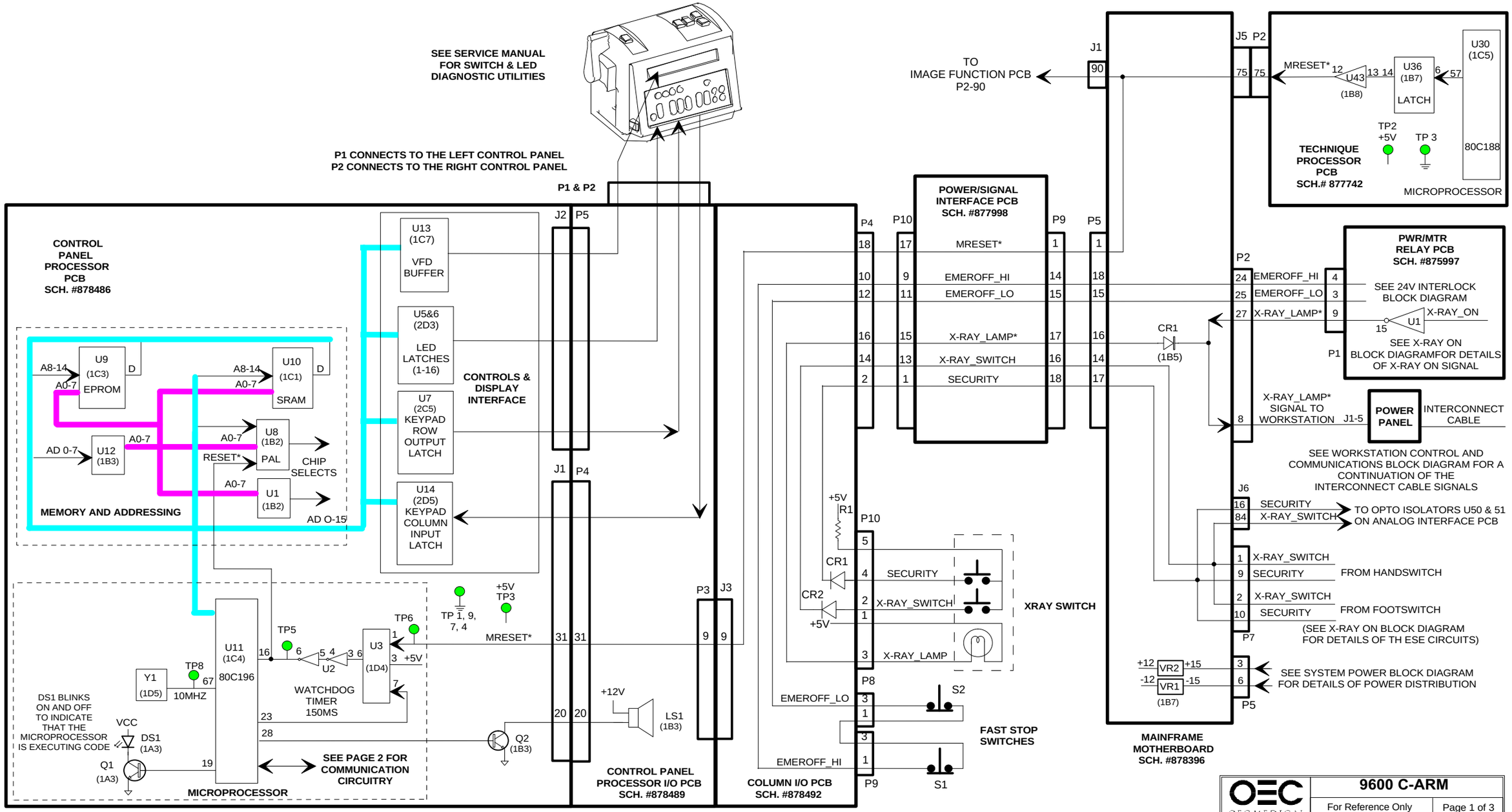

9600 Mobile Digital C-Arm - Generator Block Diagrams, Test Points, and Waveforms

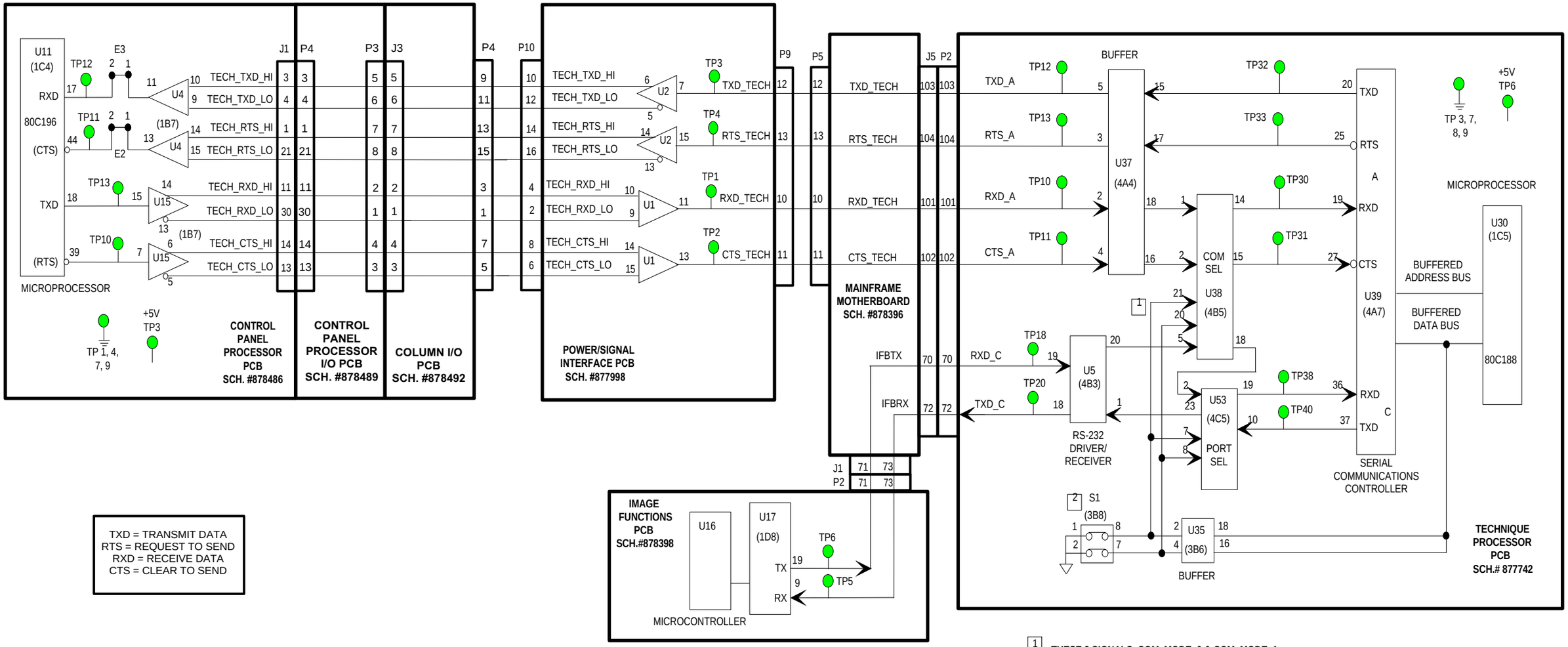

TXD = TRANSMIT DATA
RTS = REQUEST TO SEND
RXD = RECEIVE DATA
CTS = CLEAR TO SEND

1 THESE 2 SIGNALS, COM_MODE_0 & COM_MODE_1 GO TO U53 & U38 TO SELECT SERIAL COMMUNICATIONS FOR C-ARM OR UROVIEW

2 SWITCHES 1 & 2 OF SW1 MUST BE ON TO ENABLE SERIAL COMMUNICATIONS

USE THIS DIAGRAM ON SYSTEM SERIAL NUMBERS 69-2001 AND HIGHER & 62-0001 AND HIGHER

OEC MEDICAL SYSTEMS, INC Training	9600 C-ARM	
	For Reference Only	Page 2 of 3
	CPP_TP_3.DS4	6/4/96
C-ARM COMMUNICATIONS BLOCK DIAGRAM		

9600 Mobile Digital C-Arm - Generator Block Diagrams, Test Points, and Waveforms

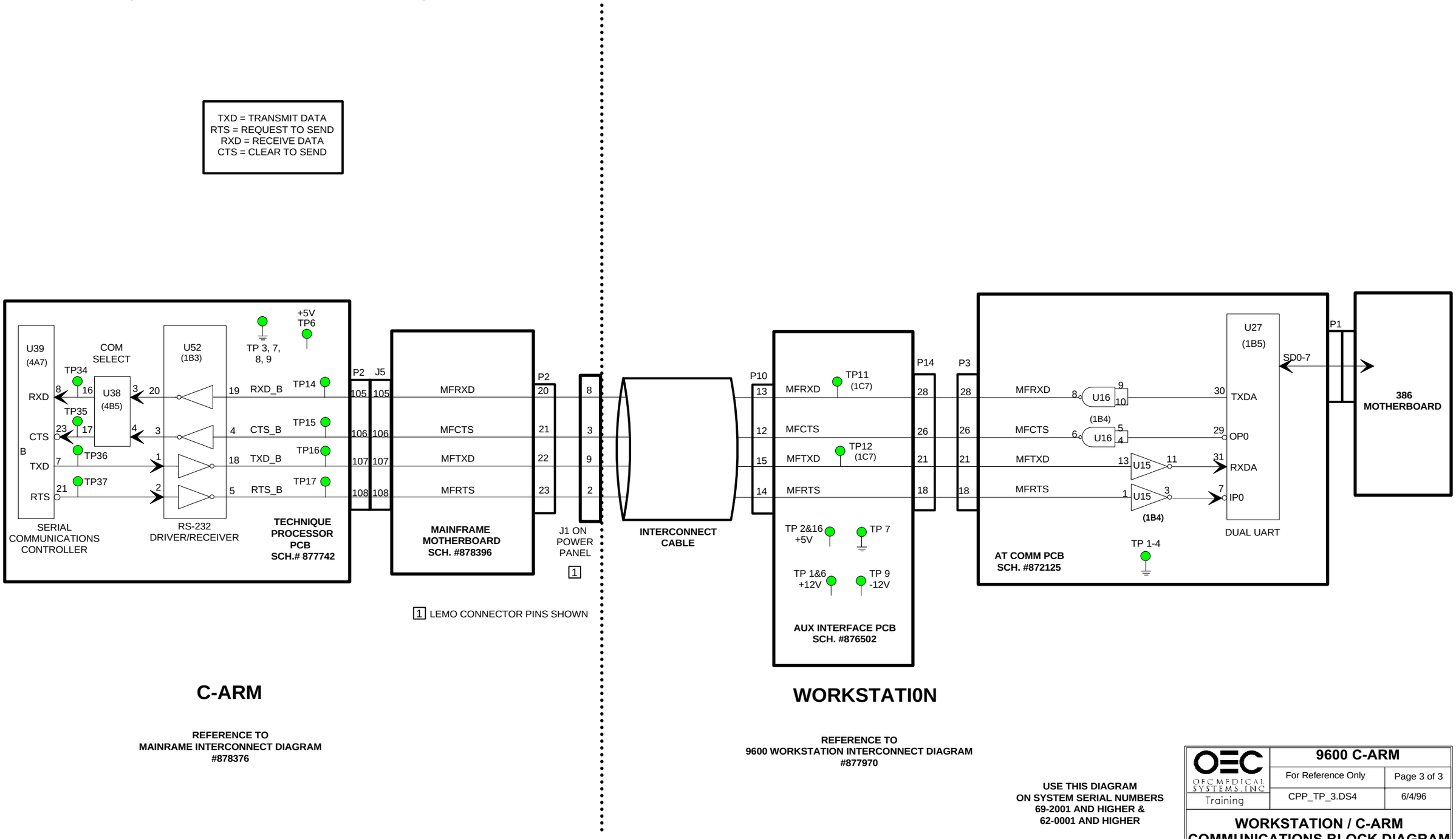

USE THIS DIAGRAM
ON SYSTEM SERIAL NUMBERS
69-2001 AND HIGHER &
62-0001 AND HIGHER

OEC MEDICAL SYSTEMS, INC Training	9600 C-ARM	
	For Reference Only	Page 3 of 3
	CPP_TP_3.DS4	6/4/96
WORKSTATION / C-ARM COMMUNICATIONS BLOCK DIAGRAM		

9600 Mobile Digital C-Arm - Generator Block Diagrams, Test Points, and Waveforms

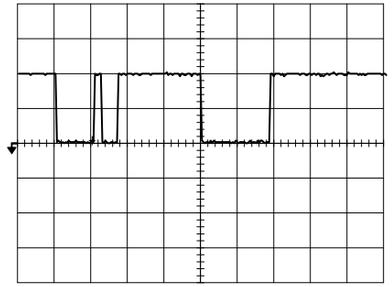

TP1
RXD_TECH

2VDC
.5ms

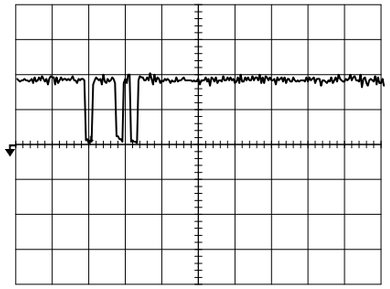

TP3
TXD_TECH

2VDC
.5ms

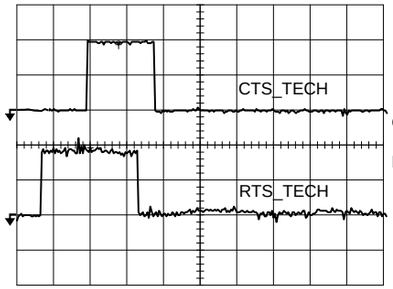

CTS_TECH at TP2
and
RTS_TECH at TP4

2VDC
1S

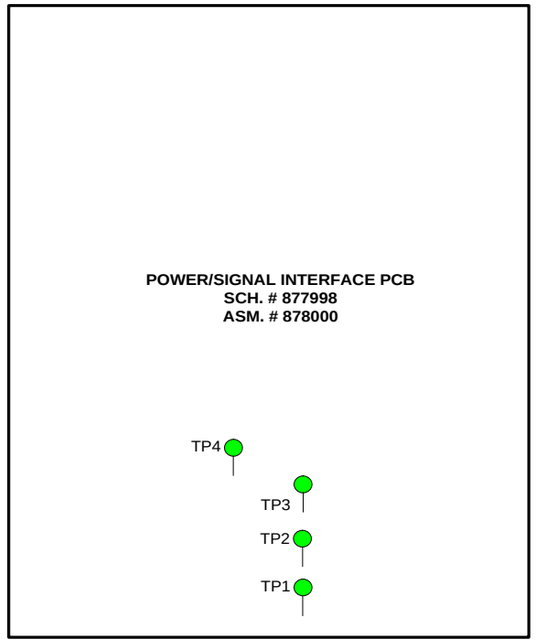

MRESET*
TP 11

2VDC
1S

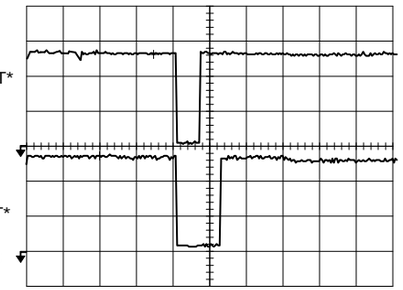

RESET*
TP 5

2VDC
1S

10 MHZ.
CLOCK
TP 4

2VDC
20MS

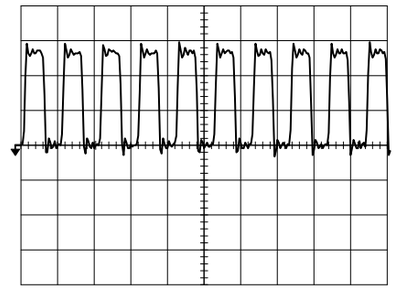

TEST POINTS IN PARENTHESES
INDICATE NEWER PCB
SCH. # 878486

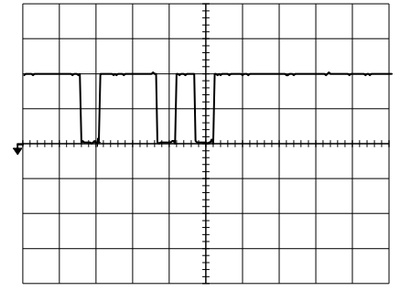

RXD
TP 10
(TP 12)

.2ms
2VDC

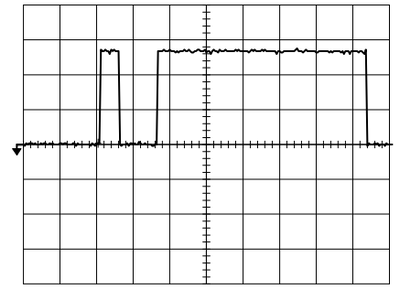

TXD
TP 6
(TP 13)

.2ms
2VDC

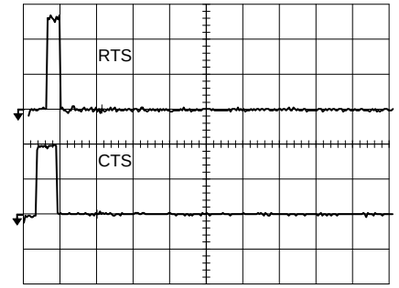

RTS at TP 7 (TP 10)
and
CTS at TP 9 (TP 11)

2VDC
5S

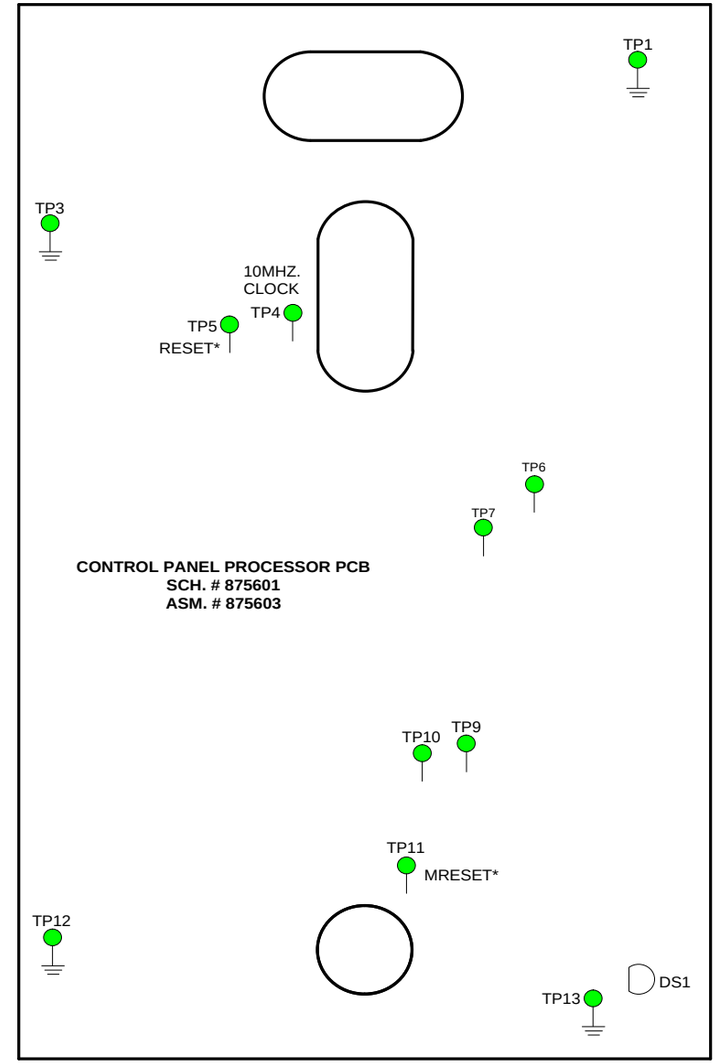

COMMUNICATION SIGNALS

POWER SIGNAL INTERFACE PCB
AND
CONTROL PANEL PROCESSOR

OEC MEDICAL SYSTEMS, INC Training	**9600 C-ARM**	
	For Reference Only	Page 1 of 3
	CP_TP_SS.DS4	4/23/96

CONTROL PANEL PROCESSOR/ TECHNIQUE PROCESSOR SIGNAL SHEET

9600 Mobile Digital C-Arm - Generator Block Diagrams, Test Points, and Waveforms

TEST POINTS IN
PARENTHESES
INDICATE OLDER PCB
SCH. #876735

COMMUNICATION SIGNALS

TECHNIQUE PROCESSOR TO CONTROL PANEL PROCESSOR
AND
TECHNIQUE PROCESSOR TO IMAGE FUNCTIONS PCP

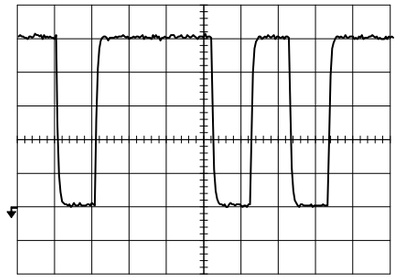

TXD_A
TP 32
(TP 12)
1VDC
.100ms

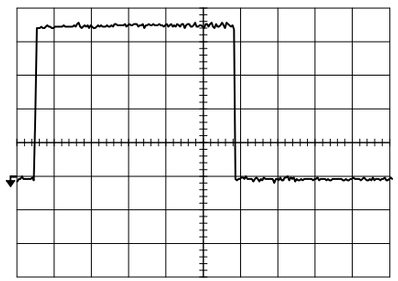

RTS_A
TP 33
(TP 14)
500ms
1VDC

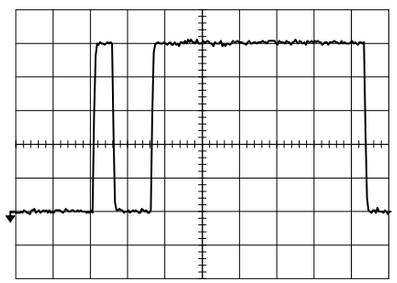

RXD_A
TP 30
(TP 10)
500ms
1VDC

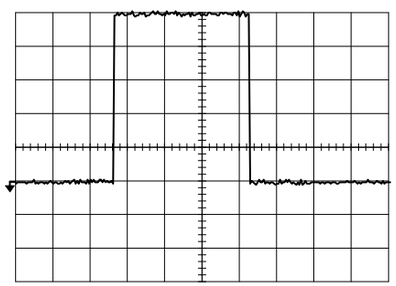

CTS_A
TP 31
(TP 11)
500ms
1VDC

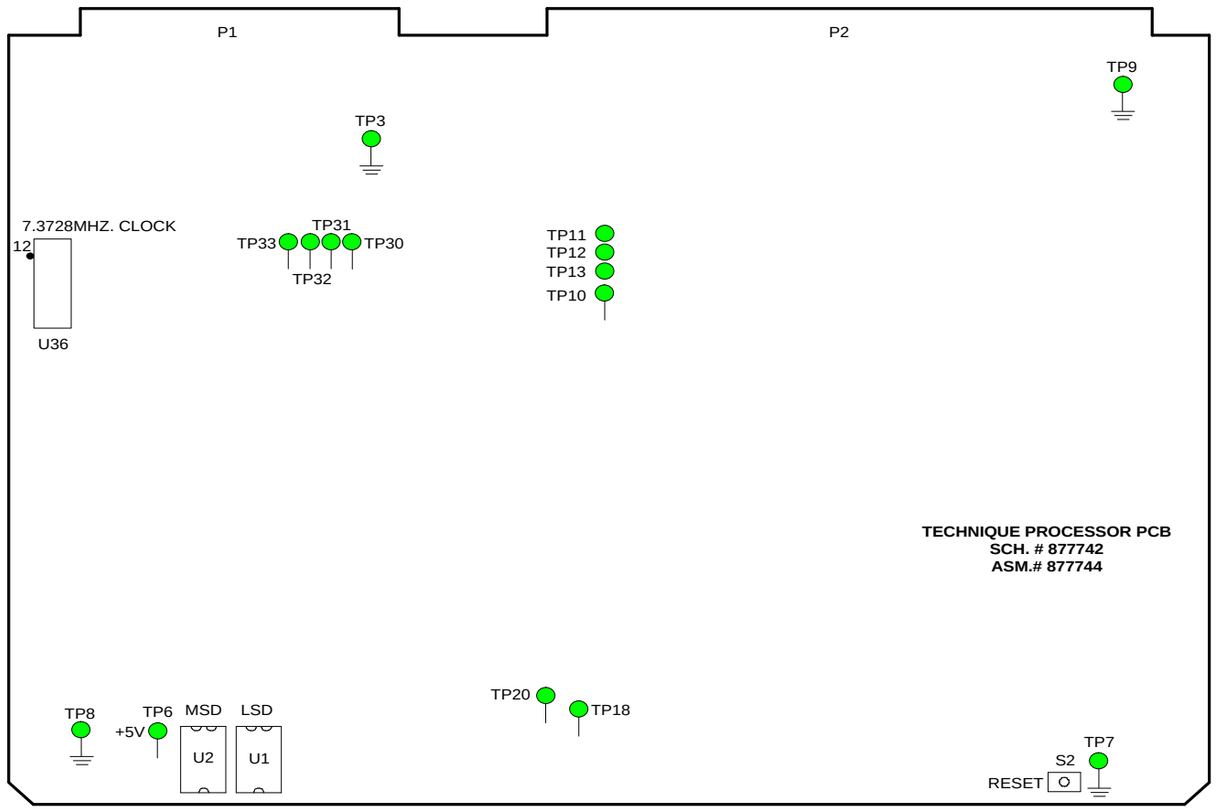

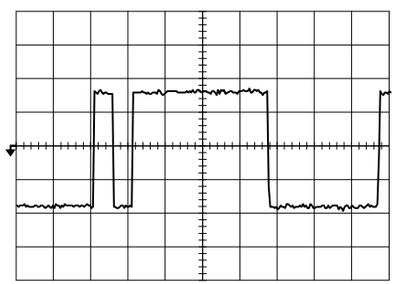

TP20 - TXD_C
.2ms 5VDC

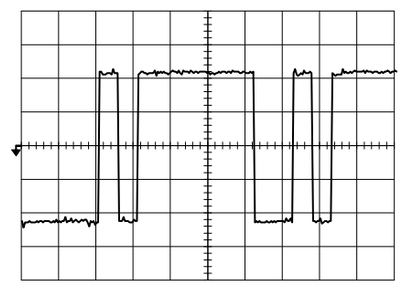

TP18 - RXD_C
.2ms 5VDC

TXD_A
TP 12
1VDC
.1ms

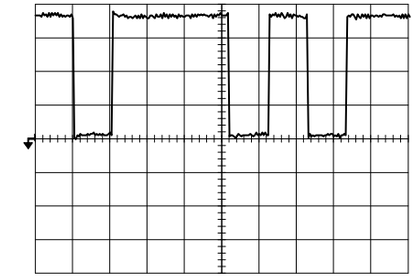

RTS_A at TP 13
and
CTS_A at TP 11
500ms
1VDC

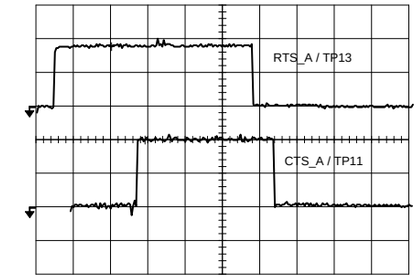

RXD_A
TP 10
1VDC
500ms

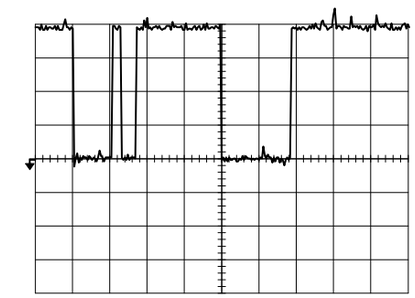

U36 PIN 12
7.3728MHZ.
CLOCK

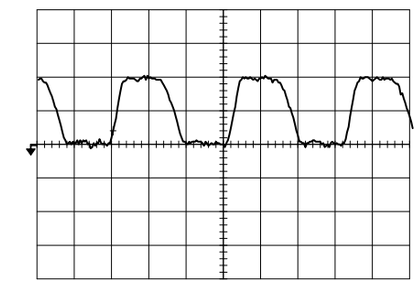

OEC MEDICAL SYSTEMS, INC	9600 C-ARM	
	For Reference Only	Page 2 of 3
Training	CP_TP_SS.DS4	4/23/96

CONTROL PANEL PROCESSOR/ TECHNIQUE PROCESSOR SIGNAL SHEET

9600 Digital Mobile C-Arm - Generator Block Diagrams, Test Points, and Signal Waveforms

COMMUNICATION SIGNALS

TECHNIQUE PROCESSOR TO WORKSTATION

TEST POINTS IN PARENTHESES INDICATE OLDER PCB SCH. #876735

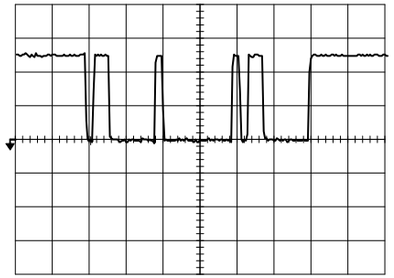

RXD_B
TP 34
.2ms
2VDC

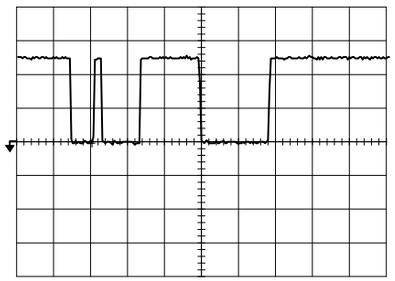

TXD_B
TP 36
.2ms
2VDC

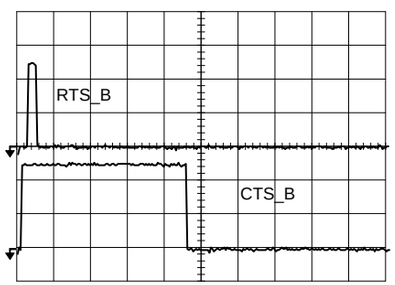

RTS_B at TP 37
and
CTS_B at TP 35

10 S
2VDC

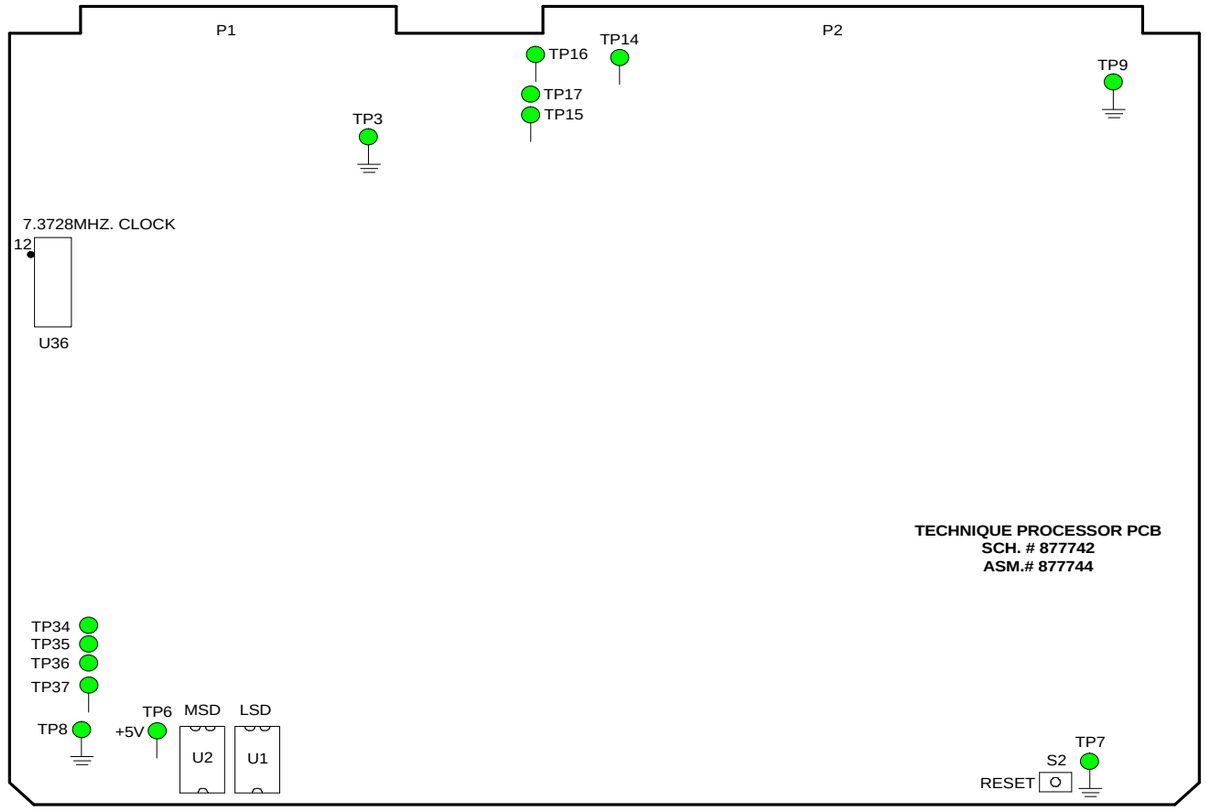

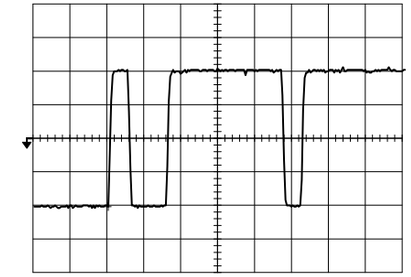

RXD_B
TP 14
(TP 17)
.2ms
5VDC

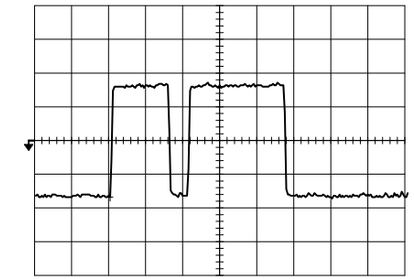

TXD_B
TP 16
(TP 9)
.2ms
5VDC

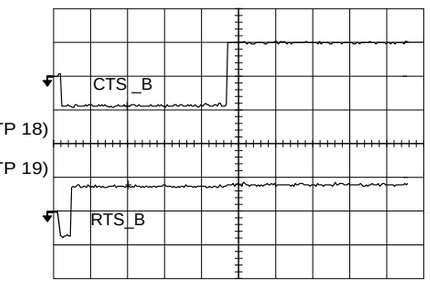

CTS_B at TP 15 (TP 18)
and
RTS_B at TP 17 (TP 19)
10VDC
10S

OEC MEDICAL SYSTEMS, INC. Training	**9600 C-ARM**	
	For Reference Only	Page 3 of 3
	CP_TP_SS.DS4	4/23/96

CONTROL PANEL PROCESSOR/ TECHNIQUE PROCESSOR SIGNAL SHEET

9600 Mobile Digital C-Arm - Generator Block Diagrams, Test Points, and Waveforms

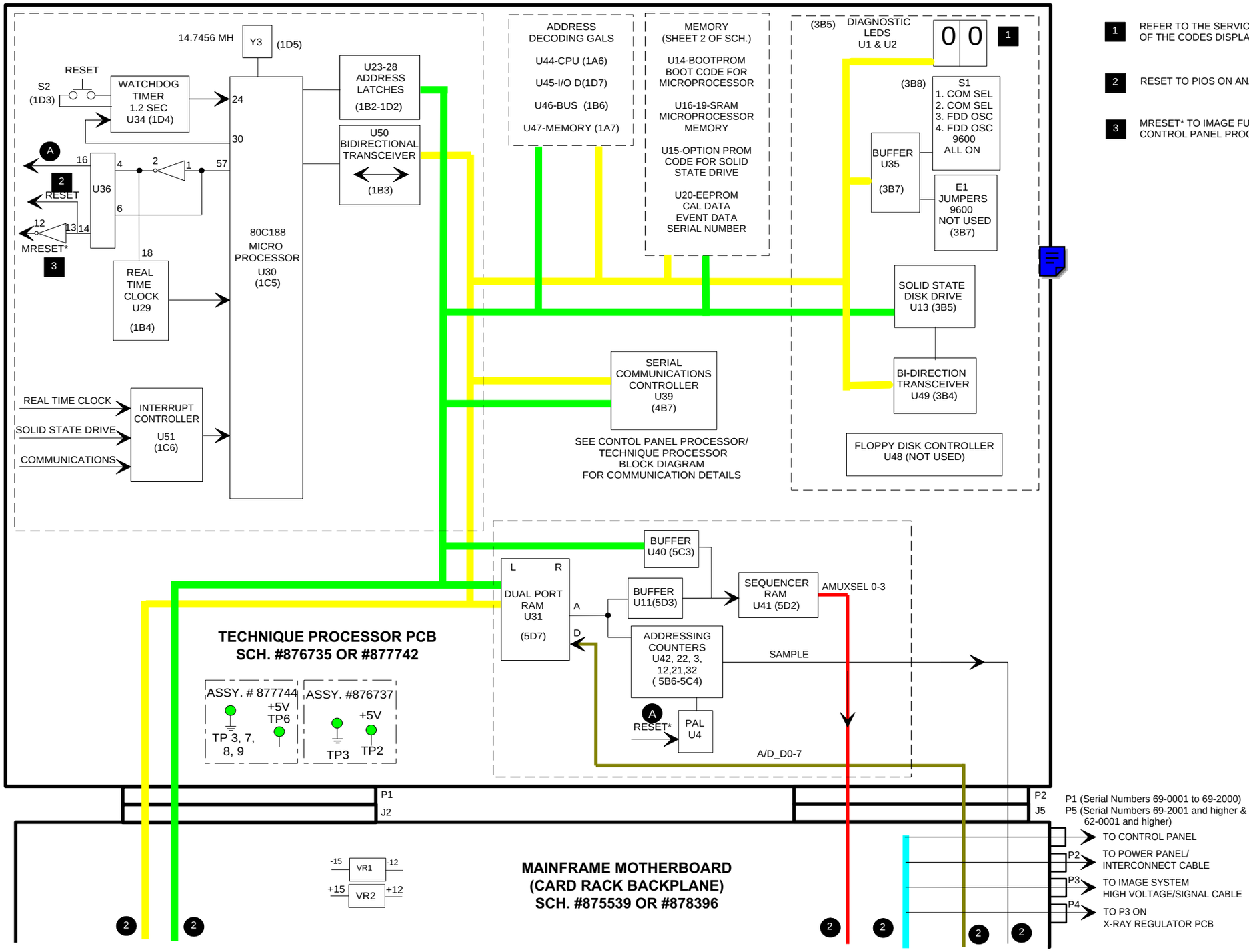

1 REFER TO THE SERVICE MANUAL FOR A LISTING OF THE CODES DISPLAYED ON THE BOOT/DIAGNOSTIC LEDS

2 RESET TO PIOS ON ANALOG INTERFACE PCB

3 MRESET* TO IMAGE FUNCTION PCB AND CONTROL PANEL PROCESSOR PCB

OEC MEDICAL SYSTEMS, INC Training	9600 C-ARM	
	For Reference Only	Page 1 of 2
	TP_AIBK2.DS4	6/4/96
	TECHNIQUE PROCESSOR/ ANALOG INTERFACE BLOCK DIAGRAM	

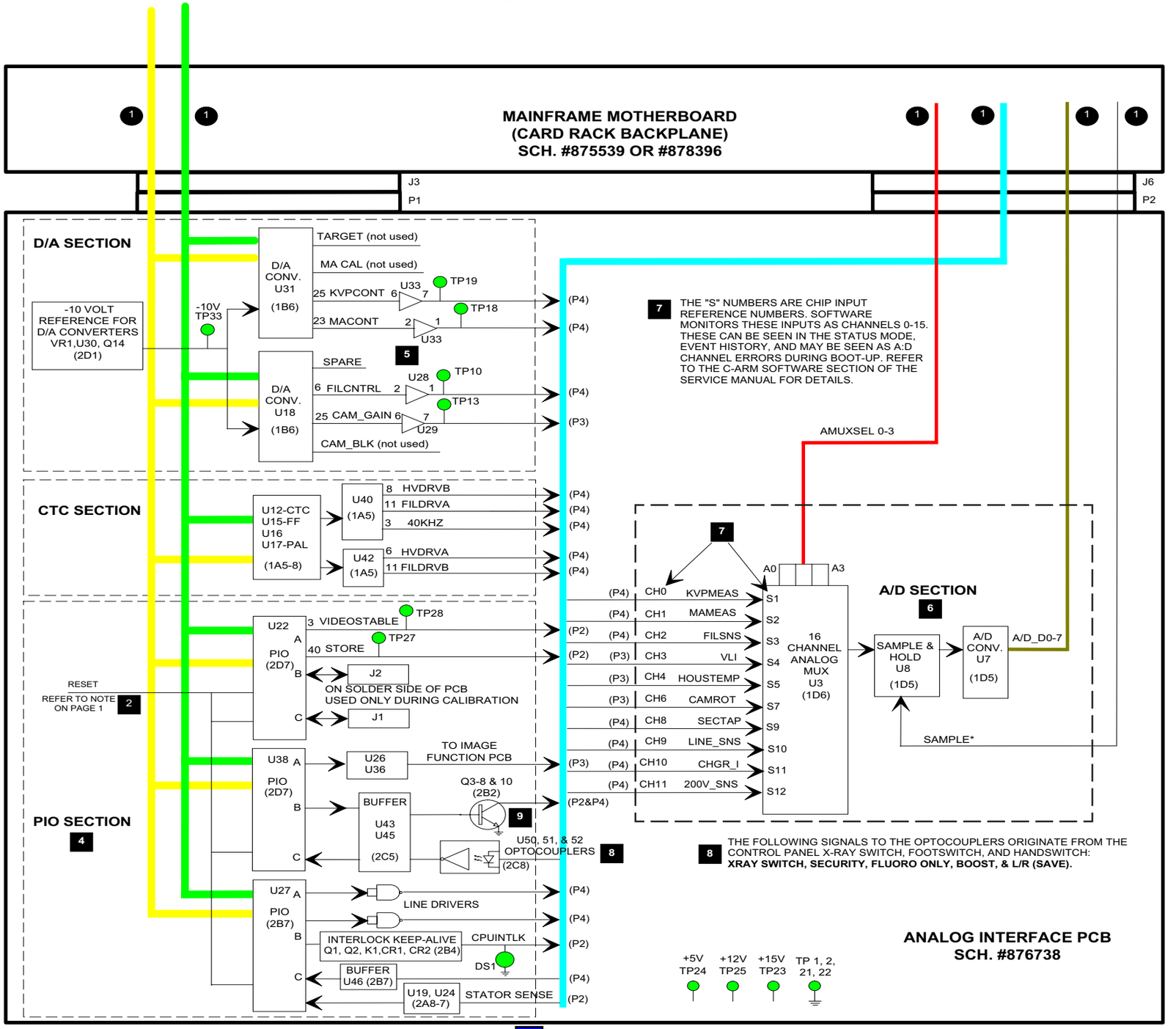

4 REFER TO THE FOLLOWING FUNCTIONAL SCHEMATICS FOR DETAILS OF THE CIRCUITRY USING THE PIOS.

U22

X-RAY ON / DISABLE
IMAGE PATH (SHEET 2)
ABS LOOP

U38

X-RAY ON / DISABLE
PRE-CHARGE
STATOR RELAY / STATOR SENSE
IMAGE INTENSIFIER CONTROLS

U27

X-RAY ON / DISABLE
STATOR RELAY / STATOR SENSE
GENERATOR INTERLOCK
GENERATOR KV CIRCUIT FAULTS
BATTERY CHARGER

9

These transistors switch the following relays:

Q3 - "Stator Run" - K1 on Power/Motor Relay PCB

Q4 - "Pre-charge" - K1 on Generator Controller Asy.

Q5 - "Contact" - K2 on Generator Controller Asy.

Q6 - "II On" - K7 on Power/Motor Relay PCB

Q7 - "Stator Start" - K2 on Power/Motor Relay PCB

Q8 - not used

Q10 - not used

5 THE OUTPUTS OF U31 AND U18 ARE CURRENT SOURCES. U33, 28, 29 ARE CURRENT TO VOLTAGE CONVERTERS.

6 THERE ARE 16 A/D CHANNELS, BUT ONLY 10 ARE BEING USED. THE RANGE OF THE VOLTAGE INPUTS IS 0-10 VOLTS.

REFER TO THE FOLLOWING FUNCTIONAL SCHEMATICS FOR DETAILS OF THE SIGNAL CIRCUITRY:

KVPMEAS (KVP MEASURED)
KVP BLOCK

MASNS (MA MEASURED)
MA BLOCK

FILSNS (FILAMENT B+ VOLTAGE SENSE)
MA BLOCK

VLI (VIDEO LEVEL INDICATOR)
ABS LOOP

HOUSETEMP (X-RAY TUBE HOUSING TEMPERATURE)
STATOR RELAY / STATOR SENSE

CAMROT (CAMERA ROTATION)
CCD CAMERA MOTOR DRIVE IRIS/ROTATION MOTORS

SECTAPV (SECONDARY TAP VOLTAGE)
GENERATOR KV CIRCUIT FAULTS

LINE_SNS (LINE VOLTAGE SENSE)
BATTERY CHARGER

CHGR_I (BATTERY CHARGER CURRENT)
BATTERY CHARGER

200V_SNS (BATTERY B+ AND BATTERY CHARGER VOLTAGE SENSE)
BATTERY CHARGER
PRE-CHARGE

OEC MEDICAL SYSTEMS, INC Training	9600 C-ARM	
	For Reference Only	Page 2 of 2
	TP_AIBK2.DS4	6/4/96

TECHNIQUE PROCESSOR/ ANALOG INTERFACE BLOCK DIAGRAM

9600 Digital Mobile C-Arm - Generator Block Diagrams, Test Points, and Signal Waveforms

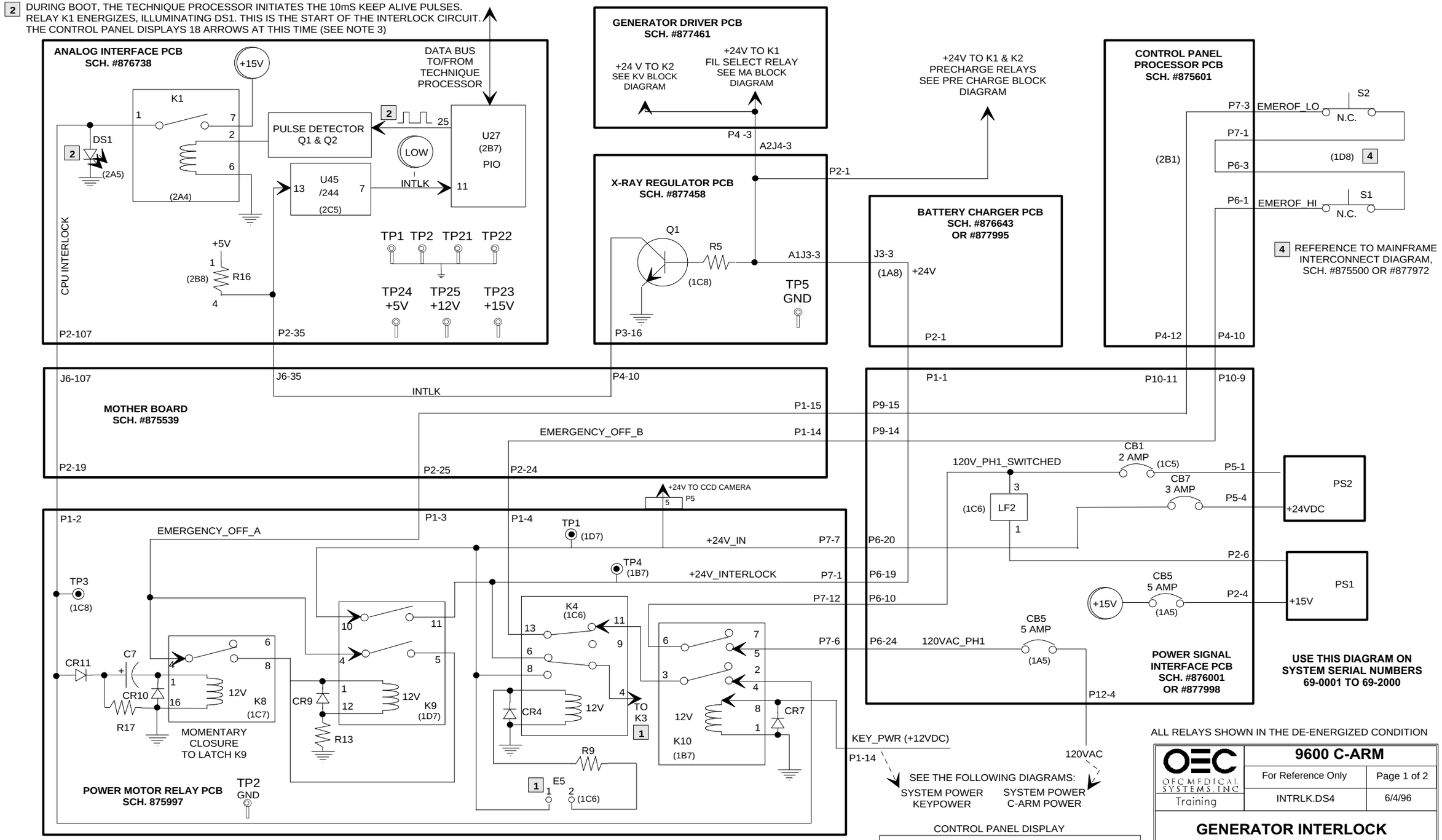

9600 Mobile Digital C-Arm - Generator Block Diagrams, Test Points, and Waveforms

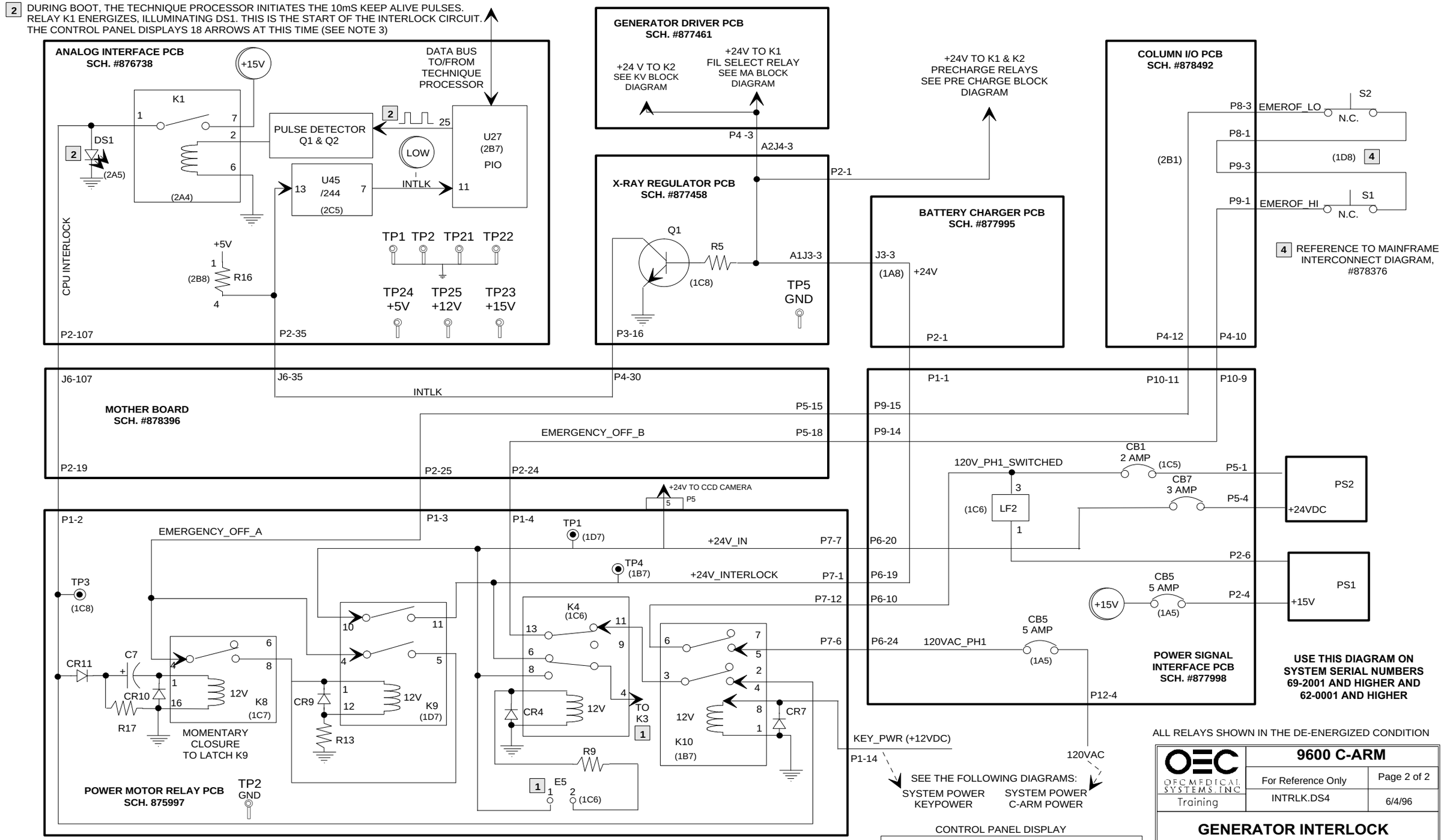

9600 Mobile Digital C-Arm - Workstation Block Diagrams, Test Points, and Waveforms

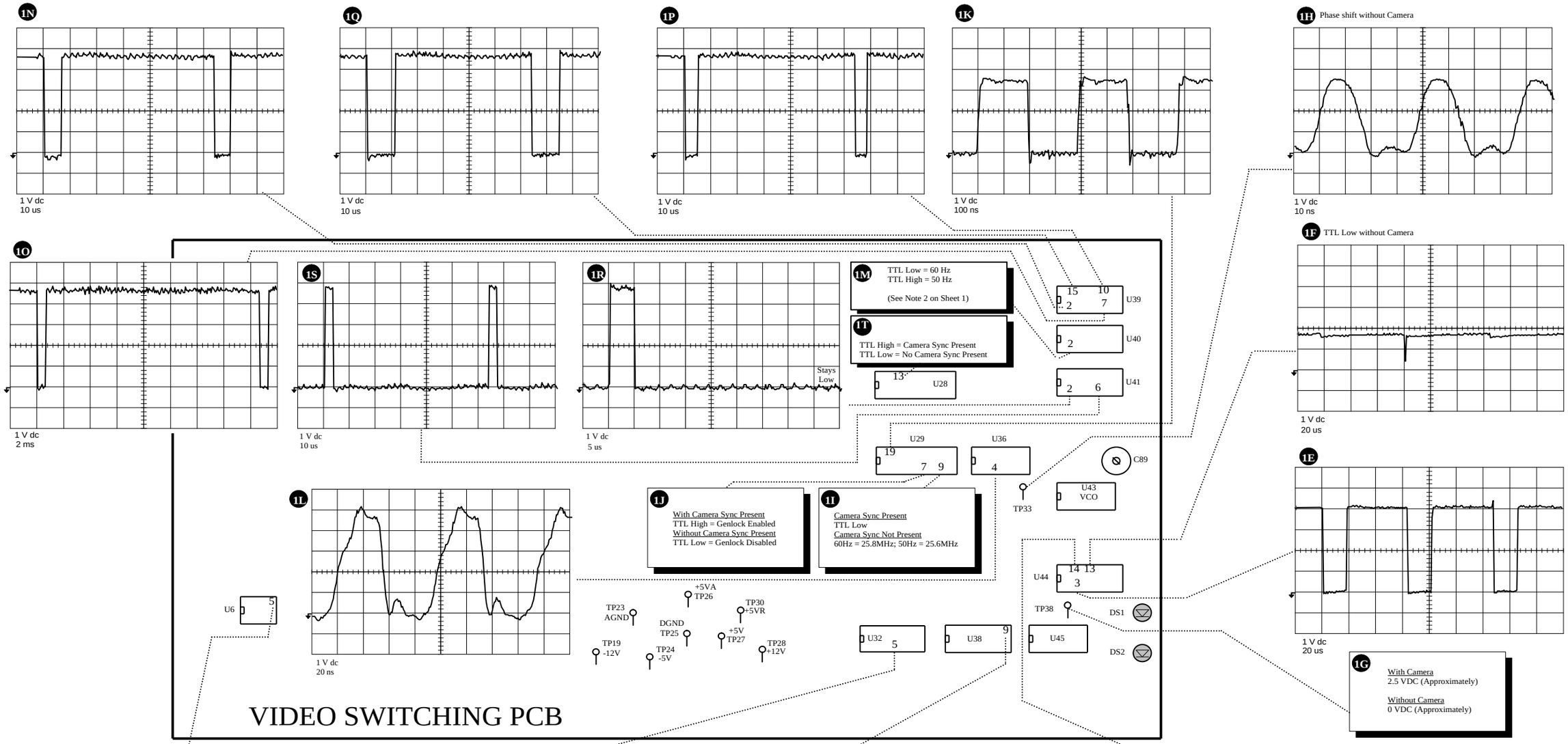

Waveforms aquired with and without Camera sync as noted.

OEC MEDICAL SYSTEMS, INC Training	9600 C-ARM	
	For Reference Only	Page 2 of 2
	GEN_LOK1.DS4	6/19/96
9600 WORKSTATION "GEN-LOCK" BLOCK DIAGRAM / WORKSHEET		

9600 Digital Mobile C-Arm - Generator Block Diagrams, Test Points, and Signal Waveforms

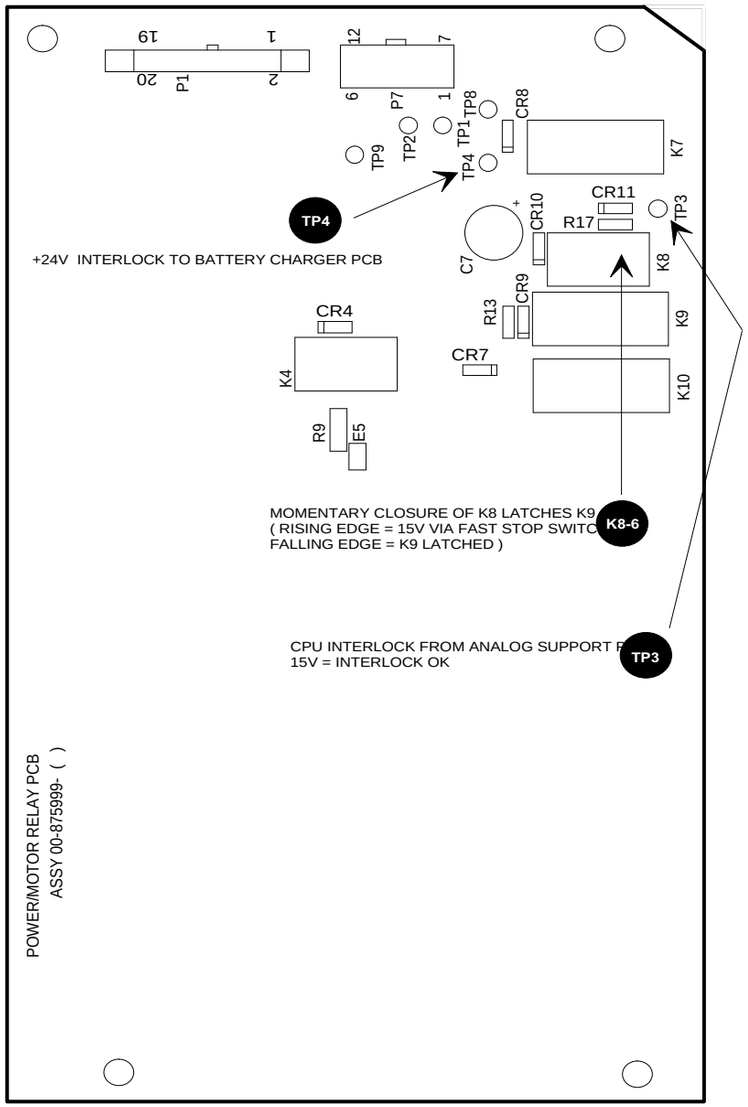

BEGINNING OF INTERLOCK

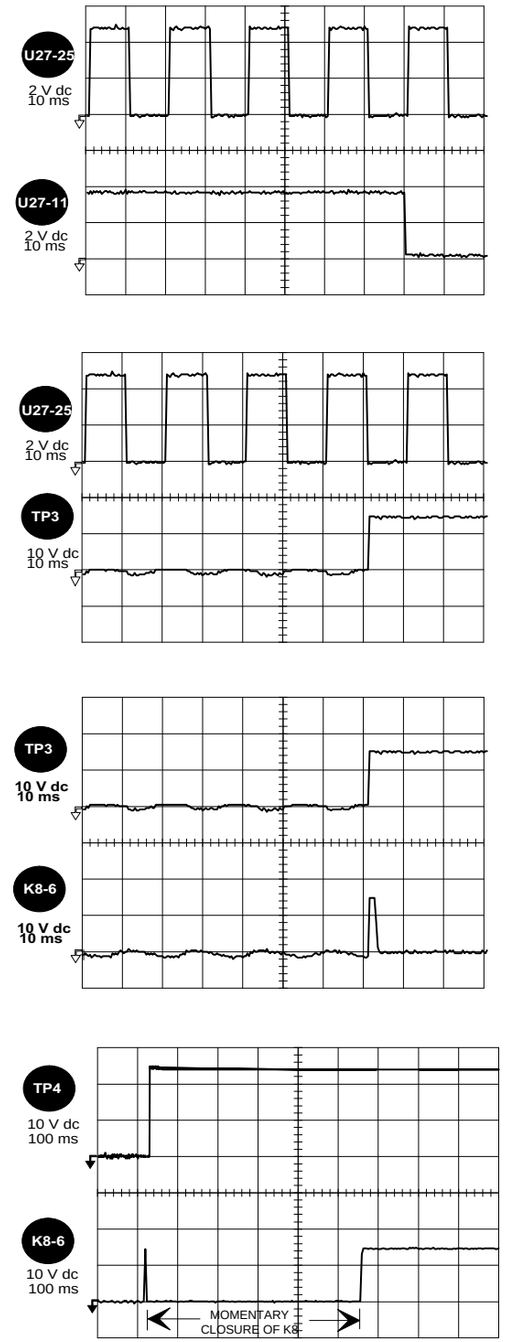

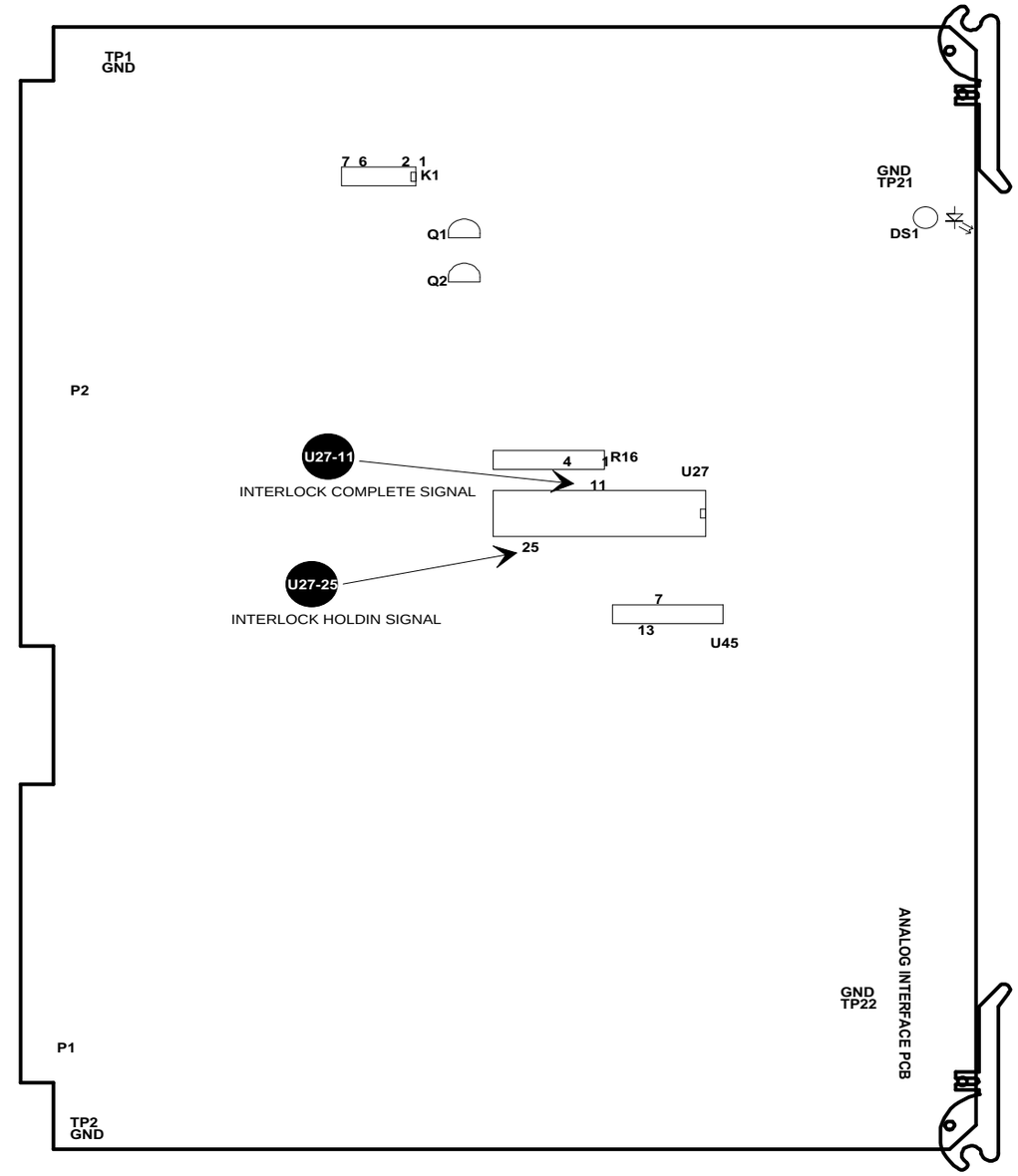

OEC MEDICAL SYSTEMS, INC Training	9600 C-ARM	
	For Reference Only	Page 1 of 1
	GINTLKSS.DS4	6/4/96
9600 GENERATOR INTERLOCK SIGNAL SHEET		

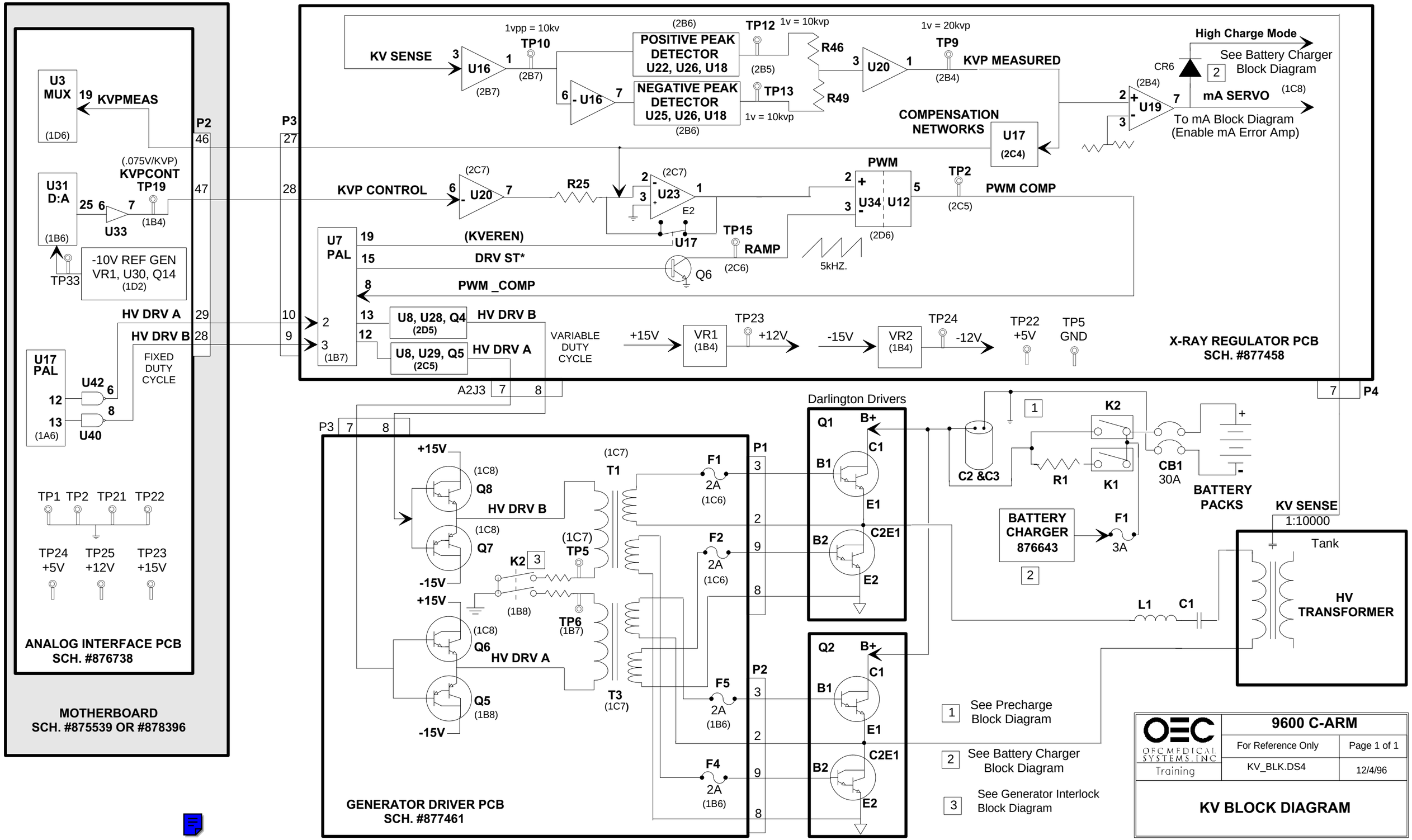
KV SENSE
U16
1vpp = 10kv
TP10
POSITIVE PEAK DETECTOR U22, U26, U18
NEGATIVE PEAK DETECTOR U25, U26, U18
TP12
TP13
1v = 10kvp
R46
R49
U20
1v = 20kvp
TP9
KVP MEASURED
COMPENSATION NETWORKS
U17
High Charge Mode
See Battery Charger Block Diagram
CR6
mA SERVO
U19
To mA Block Diagram (Enable mA Error Amp)
U3 MUX
KVPMEAS
U31 D:A
U33
(.075V/KVP)
KVPCONT
TP19
-10V REF GEN VR1, U30, Q14
TP33
KVP CONTROL
U20
R25
U23
E2
U17
TP15
RAMP
PWM
U34 U12
TP2
PWM COMP
5kHZ.
U7 PAL
(KVEREN)
DRV ST*
PWM _COMP
Q6
HV DRV A
HV DRV B
U8, U28, Q4
U8, U29, Q5
VARIABLE DUTY CYCLE
+15V
VR1
TP23
+12V
-15V
VR2
TP24
-12V
TP22 +5V
TP5 GND
X-RAY REGULATOR PCB SCH. #877458
U17 PAL
U42
U40
FIXED DUTY CYCLE
TP1 TP2 TP21 TP22
TP24 +5V
TP25 +12V
TP23 +15V
ANALOG INTERFACE PCB SCH. #876738
MOTHERBOARD SCH. #875539 OR #878396
A2J3
P3
P2
P4
Darlington Drivers
Q1
Q2
B+
B1
B2
C1
E1
C2E1
E2
C2 &C3
K2
K1
R1
CB1 30A
BATTERY PACKS
BATTERY CHARGER 876643
F1 3A
KV SENSE 1:10000
Tank
HV TRANSFORMER
L1
C1
Q8
Q7
Q6
Q5
T1
T3
TP5
TP6
F1 2A
F2 2A
F5 2A
F4 2A
GENERATOR DRIVER PCB SCH. #877461
1 See Precharge Block Diagram
2 See Battery Charger Block Diagram
3 See Generator Interlock Block Diagram
OEC MEDICAL SYSTEMS, INC
Training
9600 C-ARM
For Reference Only
Page 1 of 1
KV_BLK.DS4
12/4/96
KV BLOCK DIAGRAM

9600 Digital Mobile C-Arm - Generator Block Diagrams, Test Points, and Signal Waveforms

Test Conditions

In the manual fluoro mode, use a technique of 50 kV and 1 mA for the majority of this lab. Other kV settings will be useful for observing a change in DC voltages.

Note these unique kV settings on this worksheet for future reference.

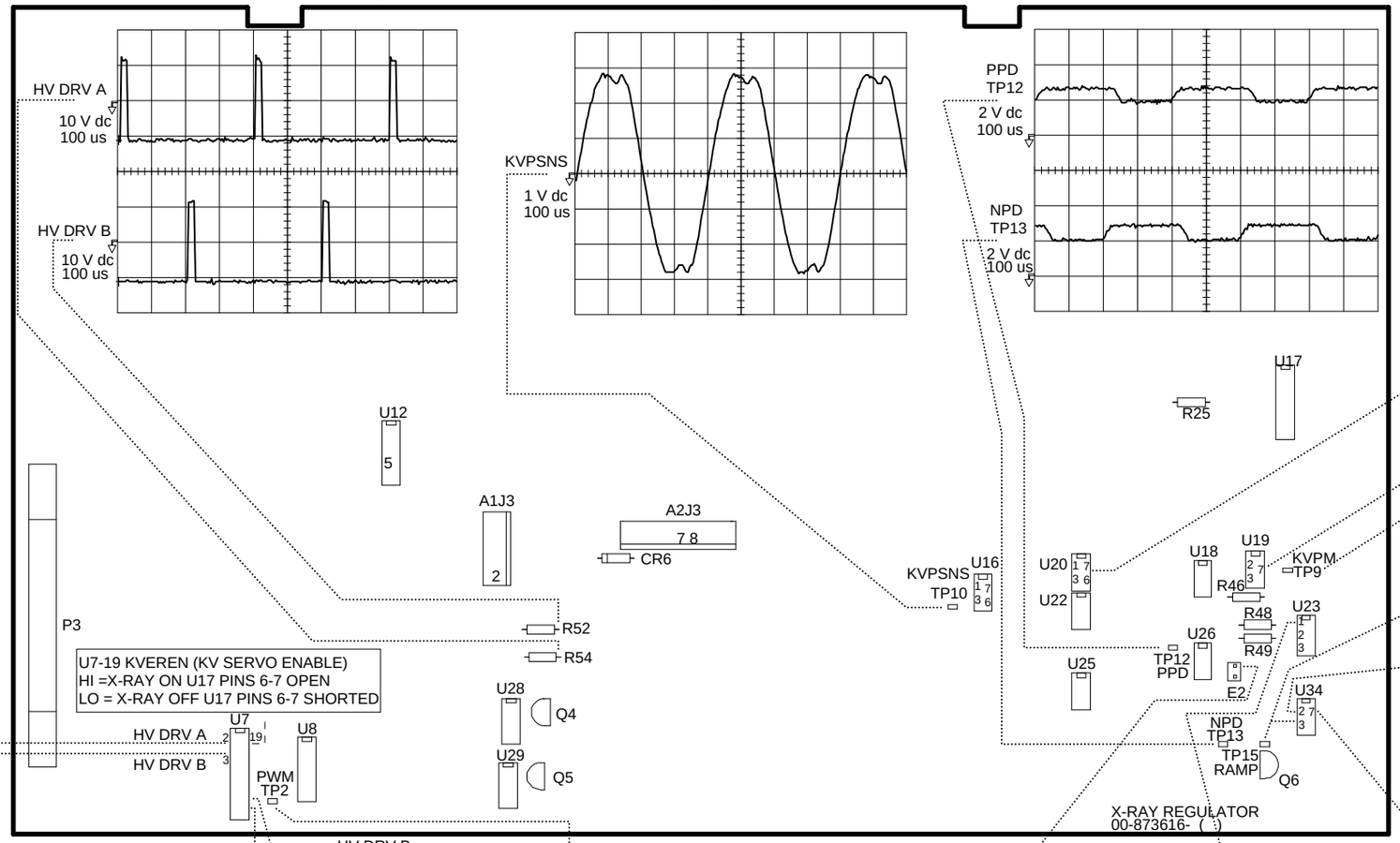

U20 -7 KVP CONTROL
-3.75 VOLTS AT 50 KVP
.075V / KV

U19-7 MA SERVO

HI = 8.5V MA SERVO ON
(X-RAYS ON)

LO = 0V MA SERVO OFF
(X-RAYS OFF)

TP9 KVP MEASURE
2.5 VOLTS AT 50KVP
1 VOLT = 20 KVP
(X-RAYS ON)

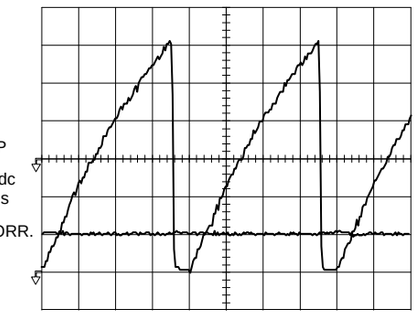

E2 KV SERVO DISABLE
INSTALLING E2
OVERRIDES KVEREN
FROM PAL U7

U23-1 KV CORRECTION

X-RAYS OFF = 0 VOLTS
X-RAYS ON = -2.2V TYP.

U34-7 COMP. OUT
GOES LOW WHEN
RAMP EXCEEDS
KV CORR. VOLTAGE.

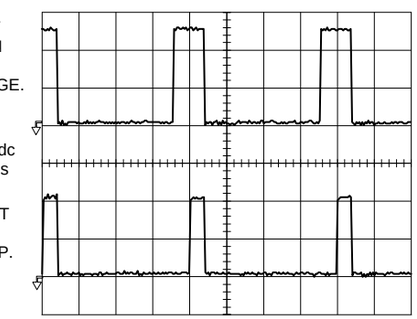

TP2 PWM_COMP
FLIP FLOP OUTPUT
U12-5 GOES LOW
WHEN U34-7 COMP.
OUT GOES LOW

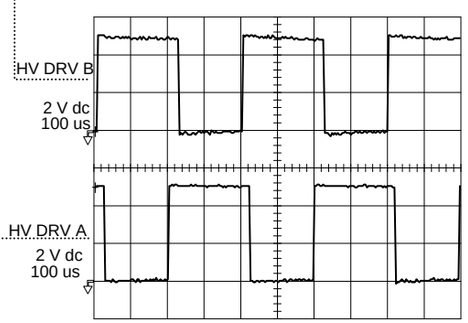

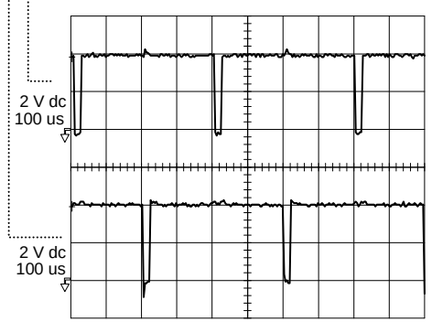

OEC MEDICAL SYSTEMS, INC Training	9600 C-ARM	
	For Reference Only	Page 1 of 2
	KV_LABSS.DS4	5/17/96
KV GENERATION SIGNAL SHEET		

9600 Mobile Digital C-Arm - Generator Block Diagrams, Test Points, and Waveforms

Test Conditions

In the manual fluoro mode, use a technique of 50 kV and 1 mA for the majority of this lab. Other kV settings will be useful for observing a change in DC voltages. Note these unique kV settings on this worksheet for future reference.

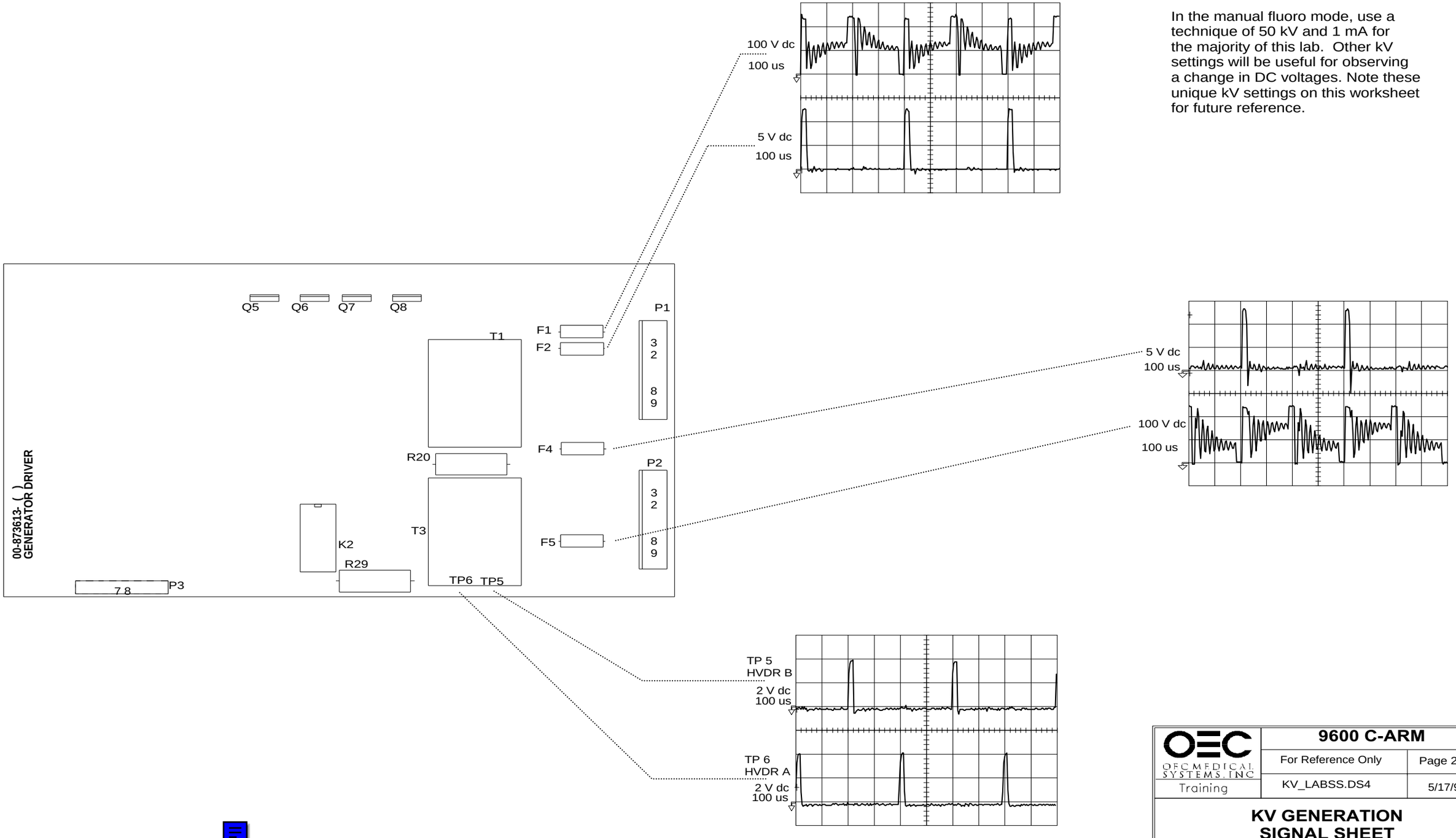

OEC MEDICAL SYSTEMS, INC Training	9600 C-ARM	
	For Reference Only	Page 2 of 2
	KV_LABSS.DS4	5/17/96
KV GENERATION SIGNAL SHEET		

9600 Mobile Digital C-Arm - Generator Block Diagrams, Test Points, and Signal Waveforms

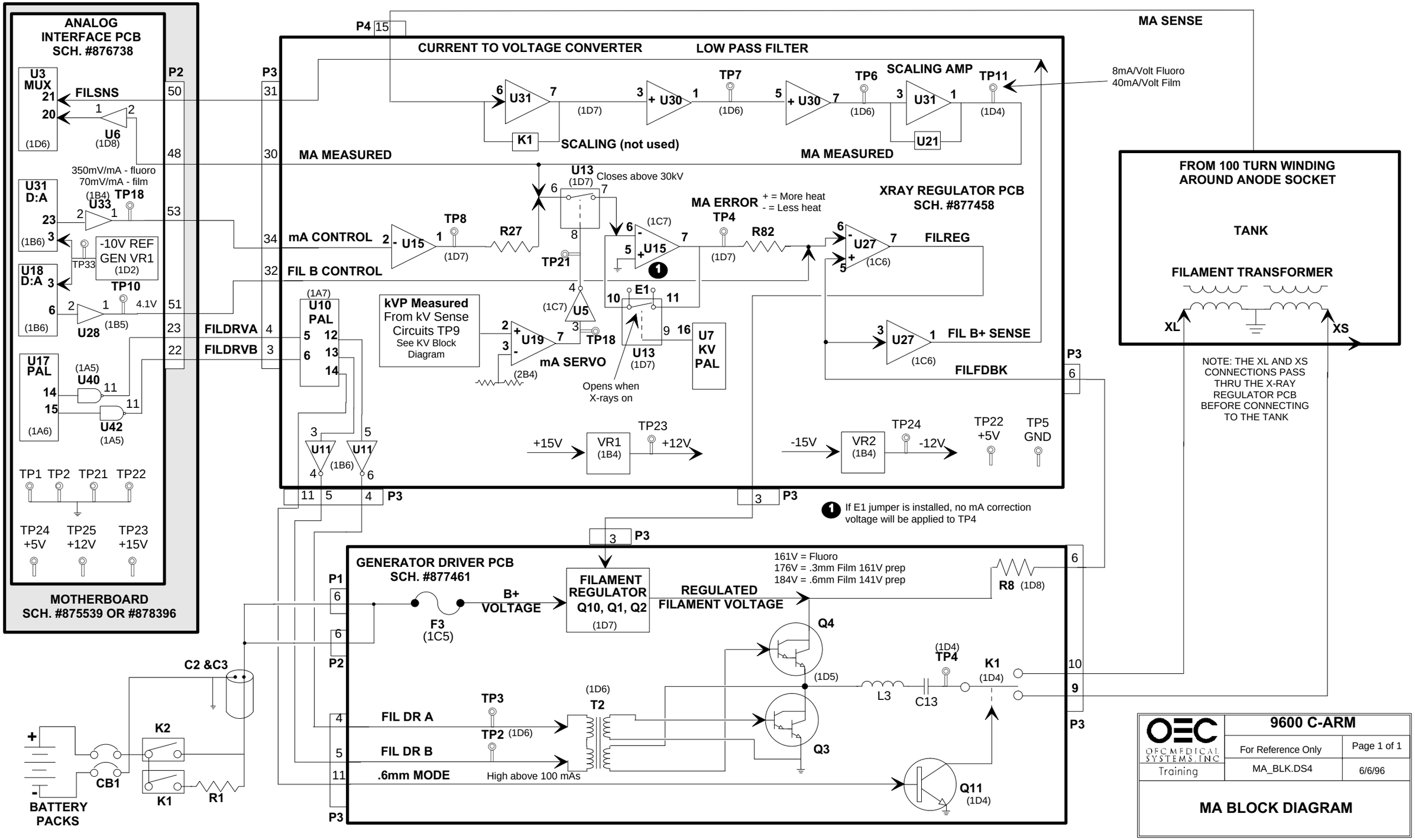

9600 Mobile Digital C-Arm - Generator Block Diagrams, Test Points, and Waveforms

TP21 MA CONTROL / MEASURE ENABLE

LO = X-RAYS ON U13 PINS 6-7 CLOSED WHICH ALLOWS MA CONTROL VOLTAGE TO BE FED TO ERROR AMP U15.

HI = X-RAYS OFF U13 PINS 6-7 OPEN WHICH REMOVES MA CONTROL VOLTAGE FROM ERROR AMP U15.

THIS SIGNAL SWITCHES FROM LO TO HI WHEN TP9 KVPM IS 1.5 VDC OR HIGHER. (THE KVP IS 30 OR ABOVE)

U7-16 MA ERROR ENABLE

HI = X-RAYS ON U13 PINS 10-11 OPEN WHICH TURNS ON ERROR AMP U15.

LO = X-RAYS OFF U13 PINS 10-11 SHORTED WHICH TURNS OFF ERROR AMP U15.

THIS SIGNAL IS CONTROLLED BY THE X-RAY ON CIRCUITRY VIA PAL U7.

U10-14 .3MM / .6MM SELECT

TTL LO IN ALL FLUORO MODES AND FILM MODE BELOW 110 MAS (.3MM SPOT).

TTL HI IN FILM MODE 110 MAS AND ABOVE (.6MM SPOT)

U10-14 GOES HI WHEN FILM MODE IS ARMED FOR THE FIRST EXPOSURE AT OR ABOVE 110 MAS AND REMAINS HI UNTIL THE MAS IS SET BELOW 110 AND THE SYSTEM IS ARMED FOR ANOTHER EXPOSURE OR FLUORO MODE IS SELECTED.

U27-1 FILAMENT B+ SENSE
FLUORO X-RAYS OFF = 3.9 VDC
FLUORO X-RAYS ON = 3.6 - 4.2 VDC
(X-RAY ON VOLTAGE VARIES DEPENDING ON THE AMOUNT OF ERROR AMP VOLTAGE AT TP4).

.3MM FILM = 4.3 VDC, ARMED = 3.9 VDC
.6MM FILM = 4.5 VDC, ARMED = 3.4 VDC

U27-6 FILAMENT B+ CONTROL
FLUORO = 3.9 VDC X-RAYS OFF
3.75 VDC X-RAYS ON TYP.

.3MM FILM = 4.3 VDC, ARMED = 3.9 VDC
.6MM FILM = 4.5 VDC, ARMED = 3.4 VDC

U27-7 FILAMENT REGULATOR

FLUORO = 3.18 VDC X-RAYS OFF
4.5 VDC X-RAYS ON TYP.

.3MM FILM = 2.37 VDC, ARMED = 3.14

.6MM FILM = 2.03 VDC, ARMED = 4.23

TP8 MA CONTROL
FLUORO @ 5MA = -1.7VDC
.3MM 70 KVP @ 20 MAS = -1.13 VDC ARMED = -4.17 VDC
.6MM 70 KVP @ 300 MAS = -6.84 VDC ARMED = -6.84 VDC
THIS VOLTAGE IS DETERMINED BY THE GENERATOR SOFTWARE.

TP11 MA MEASURE
SCALE FACTOR:
FLUORO 8 MA / VOLT (.125 VOLTS / MA)
FILM 40 MA / VOLT (.025 VOLTS / MA)

THESE COMPONENTS ARE COVERED BY THE X-RAY REGULATOR PCB

TP9 KVP MEASURE

MA SERVO ENABLE U19 TURNS ON MA SERVO WHEN THE VOLTAGE AT TP9 IS 1.5 VDC OR HIGHER.

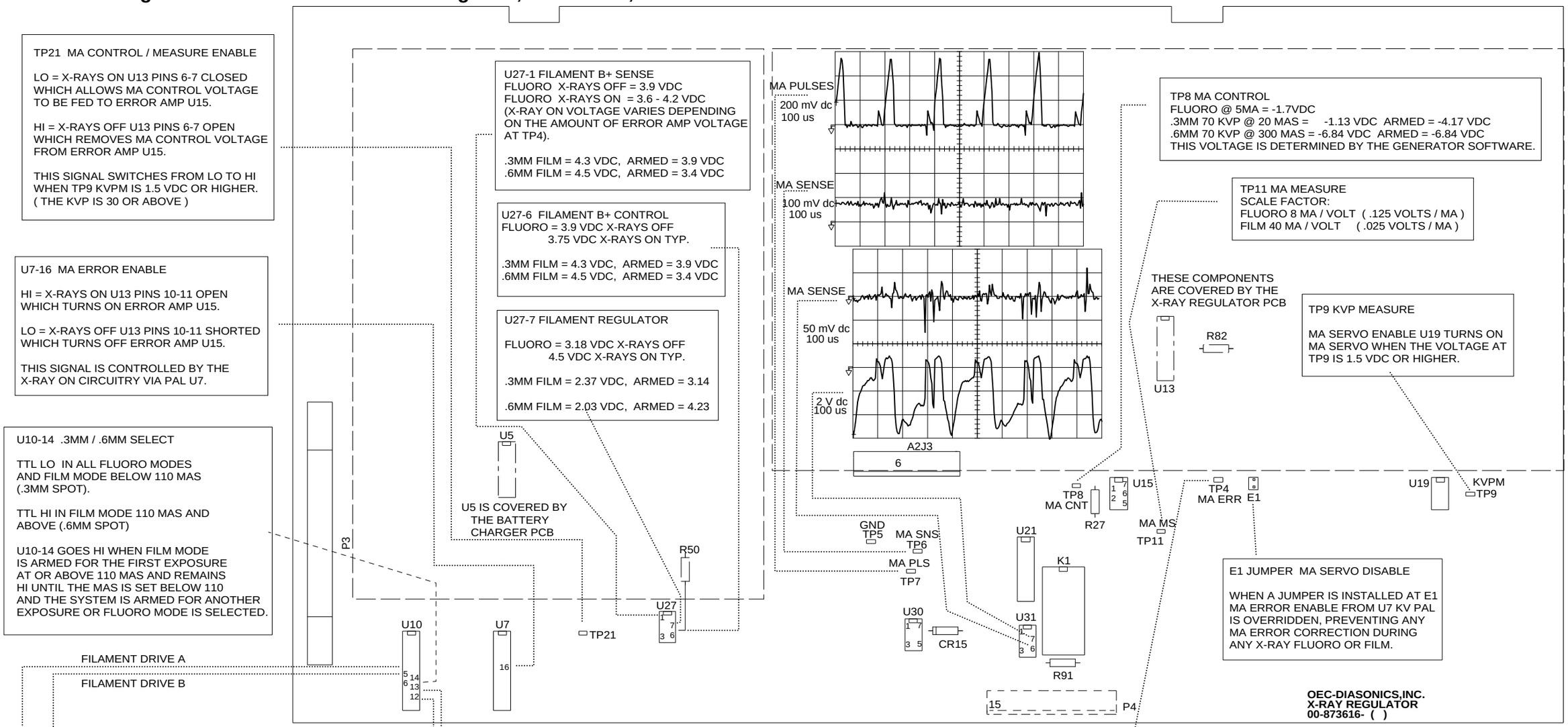

E1 JUMPER MA SERVO DISABLE

WHEN A JUMPER IS INSTALLED AT E1 MA ERROR ENABLE FROM U7 KV PAL IS OVERRIDDEN, PREVENTING ANY MA ERROR CORRECTION DURING ANY X-RAY FLUORO OR FILM.

OEC-DIASONICS,INC.
X-RAY REGULATOR
00-873616- ( )

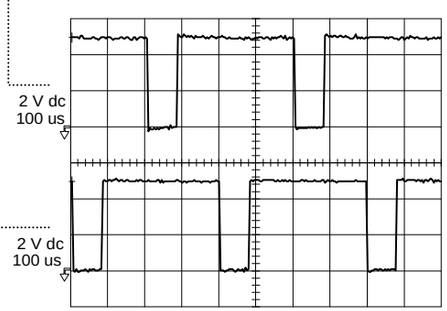

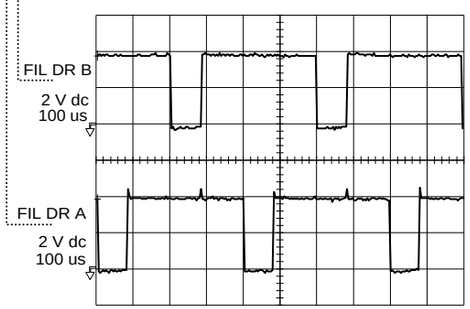

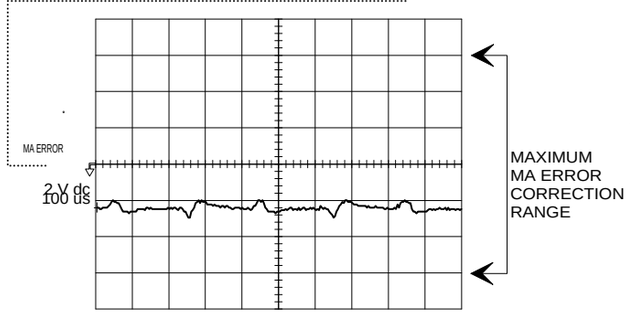

- FLUORO AUTO MODE 67 KVP @ 2.3 MA (BOOT UP DEFAULT CONDITION) X-RAYS OFF.
- FLUORO MANUAL MODE 67 KVP @ 2.3 MA X-RAYS ON

OEC MEDICAL SYSTEMS, INC Training	9600 C-ARM	
	For Reference Only	Page 1 of 2
	MA_LABSS.DS4	6/6/96
MA GE ERATIO IG AL HEET		

9600 Mobile Digital C-Arm - Generator Block Diagrams, Test Points, and Signal Waveforms

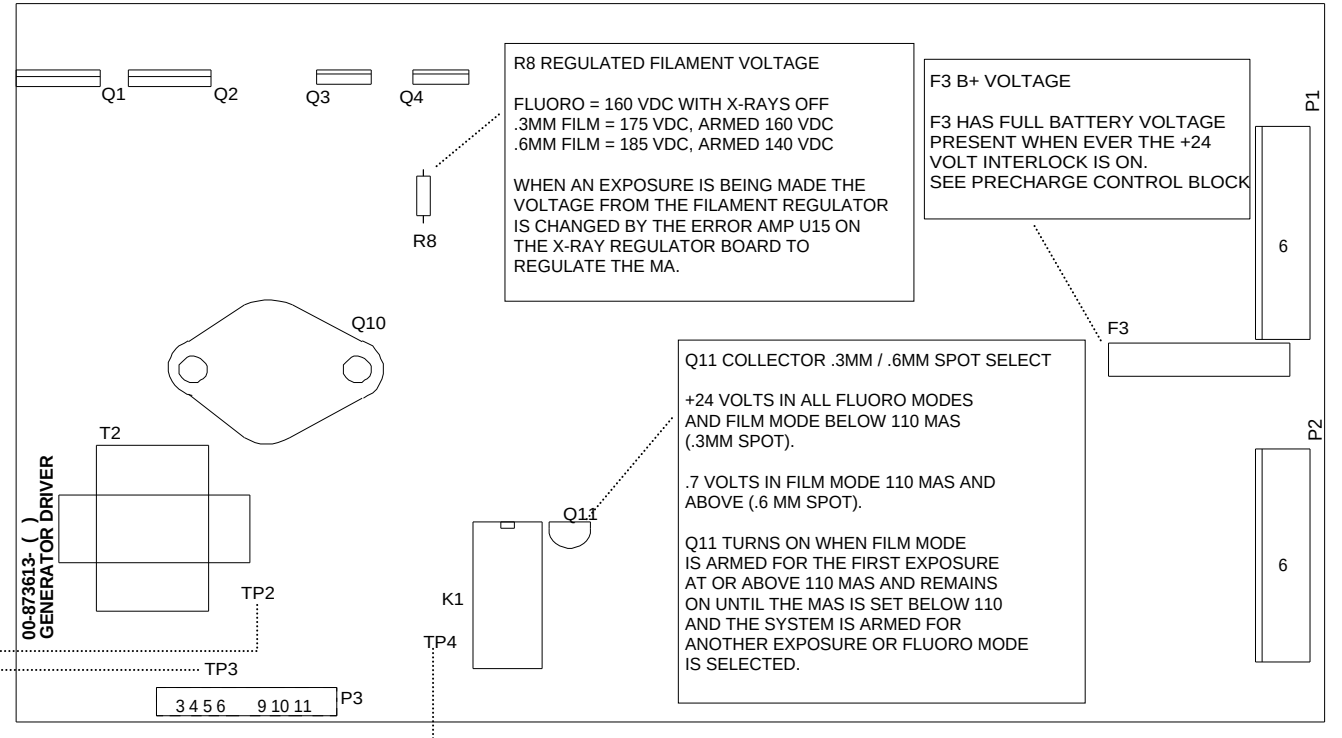

R8 REGULATED FILAMENT VOLTAGE

FLUORO = 160 VDC WITH X-RAYS OFF
.3MM FILM = 175 VDC, ARMED 160 VDC
.6MM FILM = 185 VDC, ARMED 140 VDC

WHEN AN EXPOSURE IS BEING MADE THE VOLTAGE FROM THE FILAMENT REGULATOR IS CHANGED BY THE ERROR AMP U15 ON THE X-RAY REGULATOR BOARD TO REGULATE THE MA.

F3 B+ VOLTAGE

F3 HAS FULL BATTERY VOLTAGE PRESENT WHEN EVER THE +24 VOLT INTERLOCK IS ON.
SEE PRECHARGE CONTROL BLOCK

Q11 COLLECTOR .3MM / .6MM SPOT SELECT

+24 VOLTS IN ALL FLUORO MODES AND FILM MODE BELOW 110 MAS (.3MM SPOT).

.7 VOLTS IN FILM MODE 110 MAS AND ABOVE (.6 MM SPOT).

Q11 TURNS ON WHEN FILM MODE IS ARMED FOR THE FIRST EXPOSURE AT OR ABOVE 110 MAS AND REMAINS ON UNTIL THE MAS IS SET BELOW 110 AND THE SYSTEM IS ARMED FOR ANOTHER EXPOSURE OR FLUORO MODE IS SELECTED.

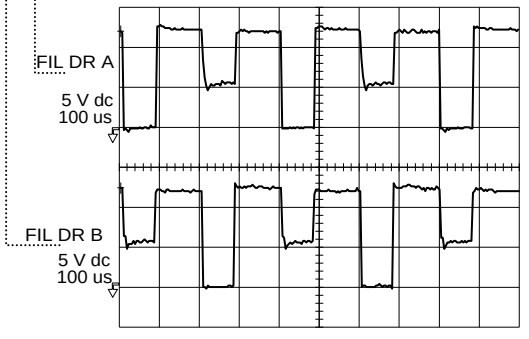

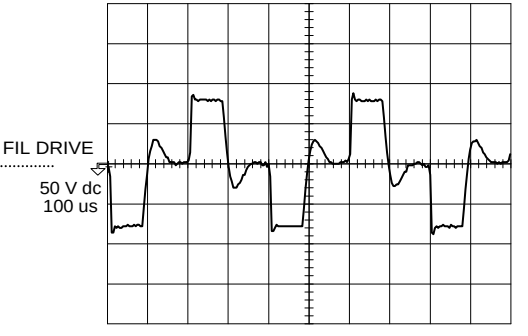

TEST CONDITIONS
FLUORO AUTO MODE 67 KVP @ 2.3 MA
(BOOT UP DEFAULT CONDITION)
X-RAYS OFF.

OEC MEDICAL SYSTEMS, INC Training	9600 C-ARM	
	For Reference Only	Page 2 of 2
	MA_LABSS.DS4	6/6/96
	MA GENERATION SIGNAL SHEET	

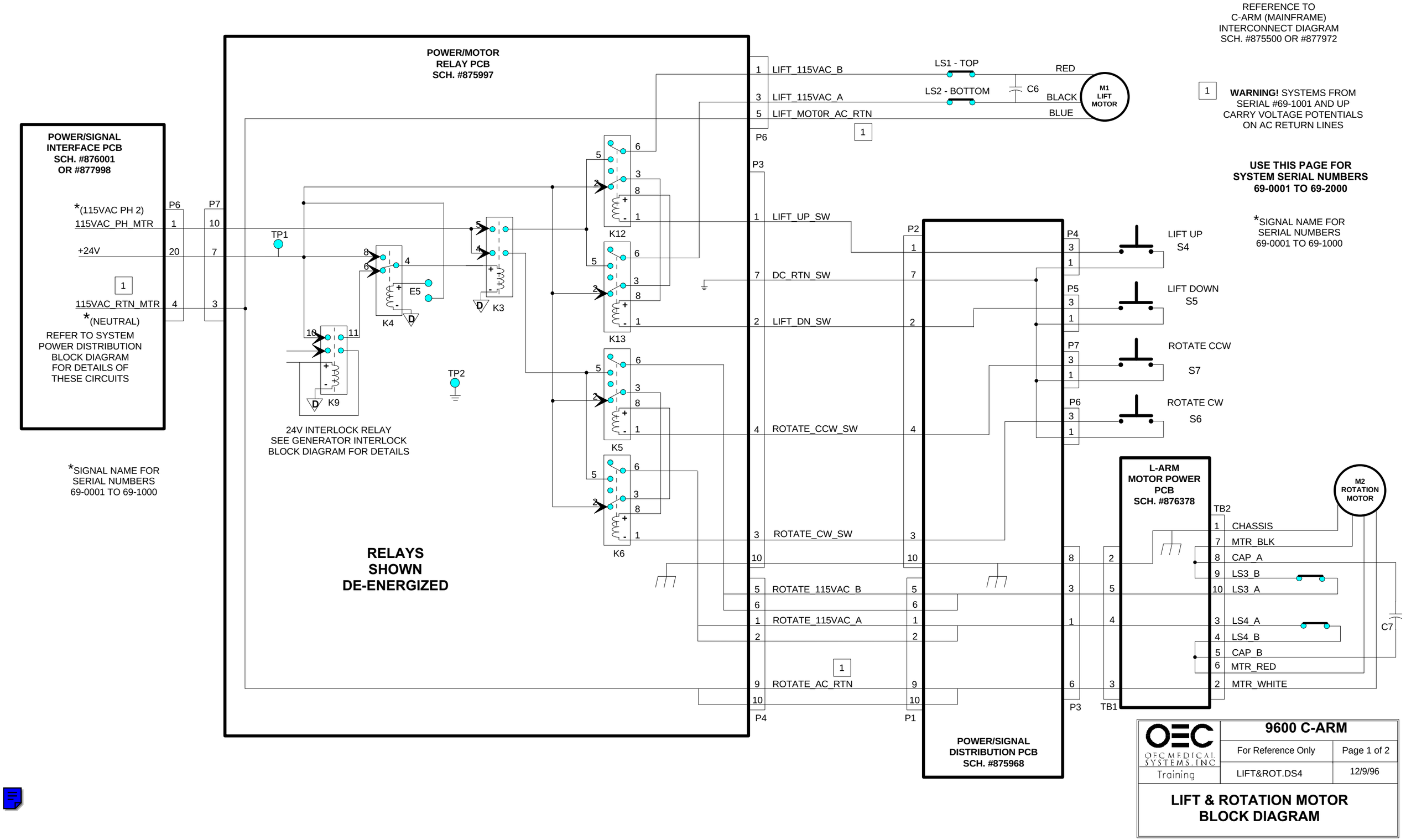
REFERENCE TO
C-ARM (MAINFRAME)
INTERCONNECT DIAGRAM
SCH. #875500 OR #877972
WARNING! SYSTEMS FROM SERIAL #69-1001 AND UP CARRY VOLTAGE POTENTIALS ON AC RETURN LINES
USE THIS PAGE FOR SYSTEM SERIAL NUMBERS 69-0001 TO 69-2000
*SIGNAL NAME FOR SERIAL NUMBERS 69-0001 TO 69-1000
POWER/MOTOR RELAY PCB SCH. #875997
POWER/SIGNAL INTERFACE PCB SCH. #876001 OR #877998
*(115VAC PH 2)
115VAC_PH_MTR
+24V
115VAC_RTN_MTR
*(NEUTRAL)
REFER TO SYSTEM POWER DISTRIBUTION BLOCK DIAGRAM FOR DETAILS OF THESE CIRCUITS
*SIGNAL NAME FOR SERIAL NUMBERS 69-0001 TO 69-1000
LIFT_115VAC_B
LIFT_115VAC_A
LIFT_MOT0R_AC_RTN
LS1 - TOP
LS2 - BOTTOM
C6
RED
BLACK
BLUE
M1 LIFT MOTOR
LIFT_UP_SW
DC_RTN_SW
LIFT_DN_SW
ROTATE_CCW_SW
ROTATE_CW_SW
ROTATE_115VAC_B
ROTATE_115VAC_A
ROTATE_AC_RTN
K12
K13
K5
K6
K4
K3
K9
E5
TP1
TP2
24V INTERLOCK RELAY SEE GENERATOR INTERLOCK BLOCK DIAGRAM FOR DETAILS
RELAYS SHOWN DE-ENERGIZED
LIFT UP S4
LIFT DOWN S5
ROTATE CCW S7
ROTATE CW S6
POWER/SIGNAL DISTRIBUTION PCB SCH. #875968
L-ARM MOTOR POWER PCB SCH. #876378
M2 ROTATION MOTOR
CHASSIS
MTR_BLK
CAP_A
LS3_B
LS3_A
LS4_A
LS4_B
CAP_B
MTR_RED
MTR_WHITE
C7
OEC MEDICAL SYSTEMS, INC
Training
9600 C-ARM
For Reference Only
Page 1 of 2
LIFT&ROT.DS4
12/9/96
LIFT & ROTATION MOTOR BLOCK DIAGRAM

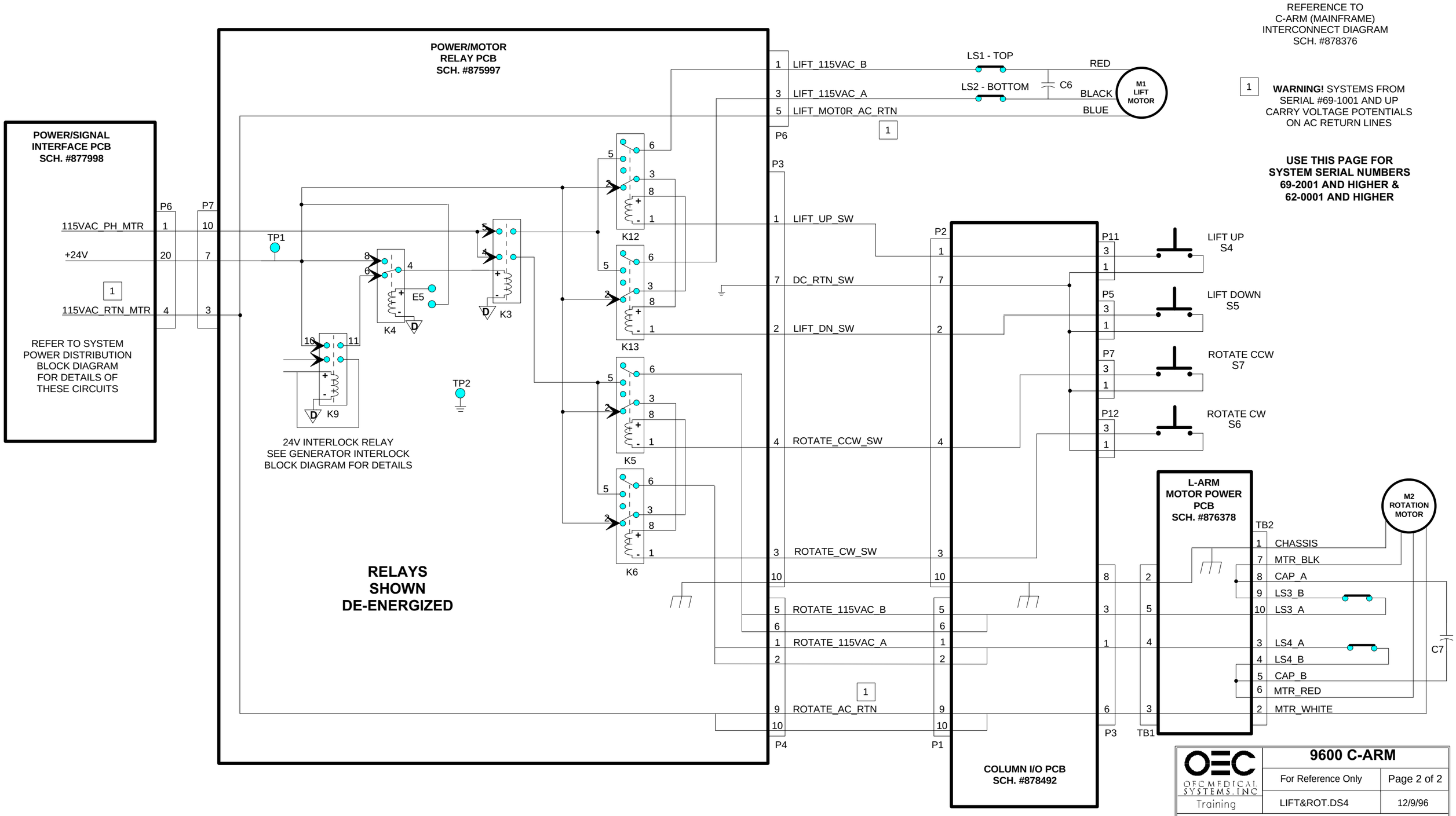
REFERENCE TO
C-ARM (MAINFRAME)
INTERCONNECT DIAGRAM
SCH. #878376
1
WARNING! SYSTEMS FROM SERIAL #69-1001 AND UP CARRY VOLTAGE POTENTIALS ON AC RETURN LINES
USE THIS PAGE FOR SYSTEM SERIAL NUMBERS 69-2001 AND HIGHER & 62-0001 AND HIGHER
POWER/MOTOR RELAY PCB SCH. #875997
POWER/SIGNAL INTERFACE PCB SCH. #877998
115VAC_PH_MTR
+24V
115VAC_RTN_MTR
REFER TO SYSTEM POWER DISTRIBUTION BLOCK DIAGRAM FOR DETAILS OF THESE CIRCUITS
P6
P7
TP1
TP2
K12
K13
K5
K6
K4
K3
K9
E5
24V INTERLOCK RELAY SEE GENERATOR INTERLOCK BLOCK DIAGRAM FOR DETAILS
RELAYS SHOWN DE-ENERGIZED
LIFT_115VAC_B
LIFT_115VAC_A
LIFT_MOT0R_AC_RTN
LS1 - TOP
LS2 - BOTTOM
C6
RED
BLACK
BLUE
M1 LIFT MOTOR
P3
LIFT_UP_SW
DC_RTN_SW
LIFT_DN_SW
ROTATE_CCW_SW
ROTATE_CW_SW
ROTATE_115VAC_B
ROTATE_115VAC_A
ROTATE_AC_RTN
P4
P1
P2
COLUMN I/O PCB SCH. #878492
P11
P5
P7
P12
LIFT UP S4
LIFT DOWN S5
ROTATE CCW S7
ROTATE CW S6
L-ARM MOTOR POWER PCB SCH. #876378
TB2
TB1
M2 ROTATION MOTOR
CHASSIS
MTR_BLK
CAP_A
LS3_B
LS3_A
LS4_A
LS4_B
CAP_B
MTR_RED
MTR_WHITE
C7
OEC MEDICAL SYSTEMS, INC
Training
9600 C-ARM
For Reference Only
Page 2 of 2
LIFT&ROT.DS4
12/9/96
LIFT & ROTATION MOTOR BLOCK DIAGRAM

9600 Mobile Digital C-Arm - Generator Block Diagrams, Test Points, and Signal Waveforms

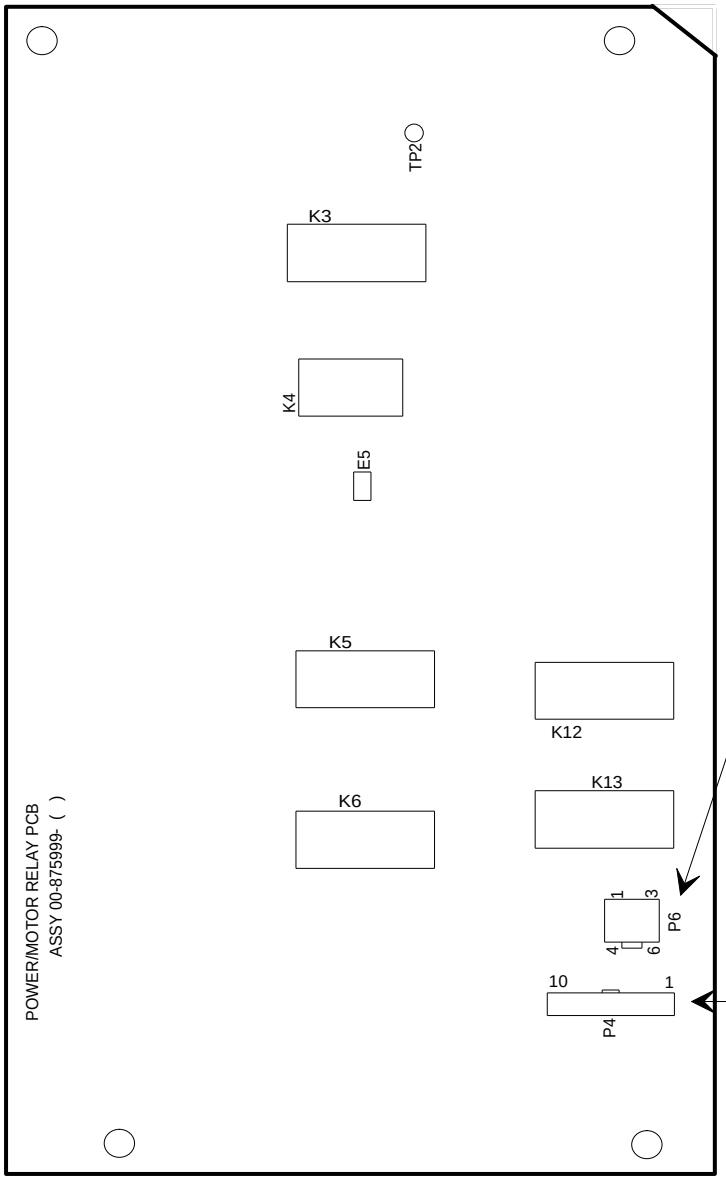

LIFT MOTOR UP

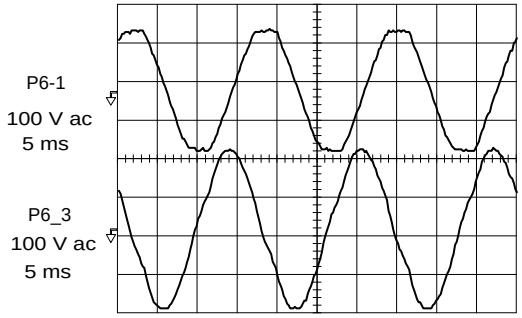

LIFT MOTOR DOWN

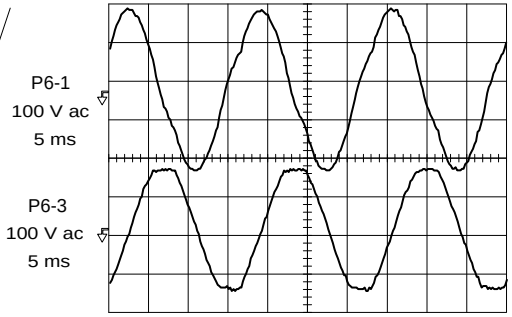

ROTATE CW

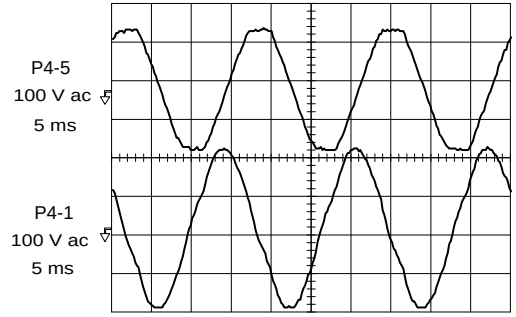

ROTATE CCW

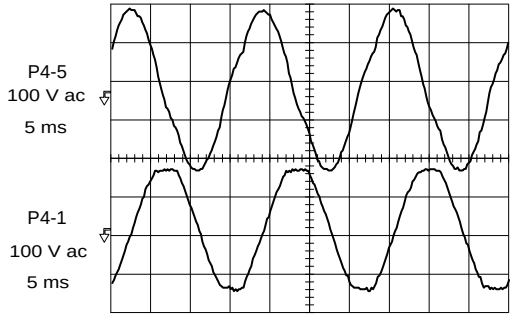

OEC MEDICAL SYSTEMS, INC Training	9600 C-ARM	
	For Reference Only	Page 1 of 1
	LFT&RTSS.DS4	6/6/96

LIFT / ROTATATION MOTORS SIGNAL SHEET

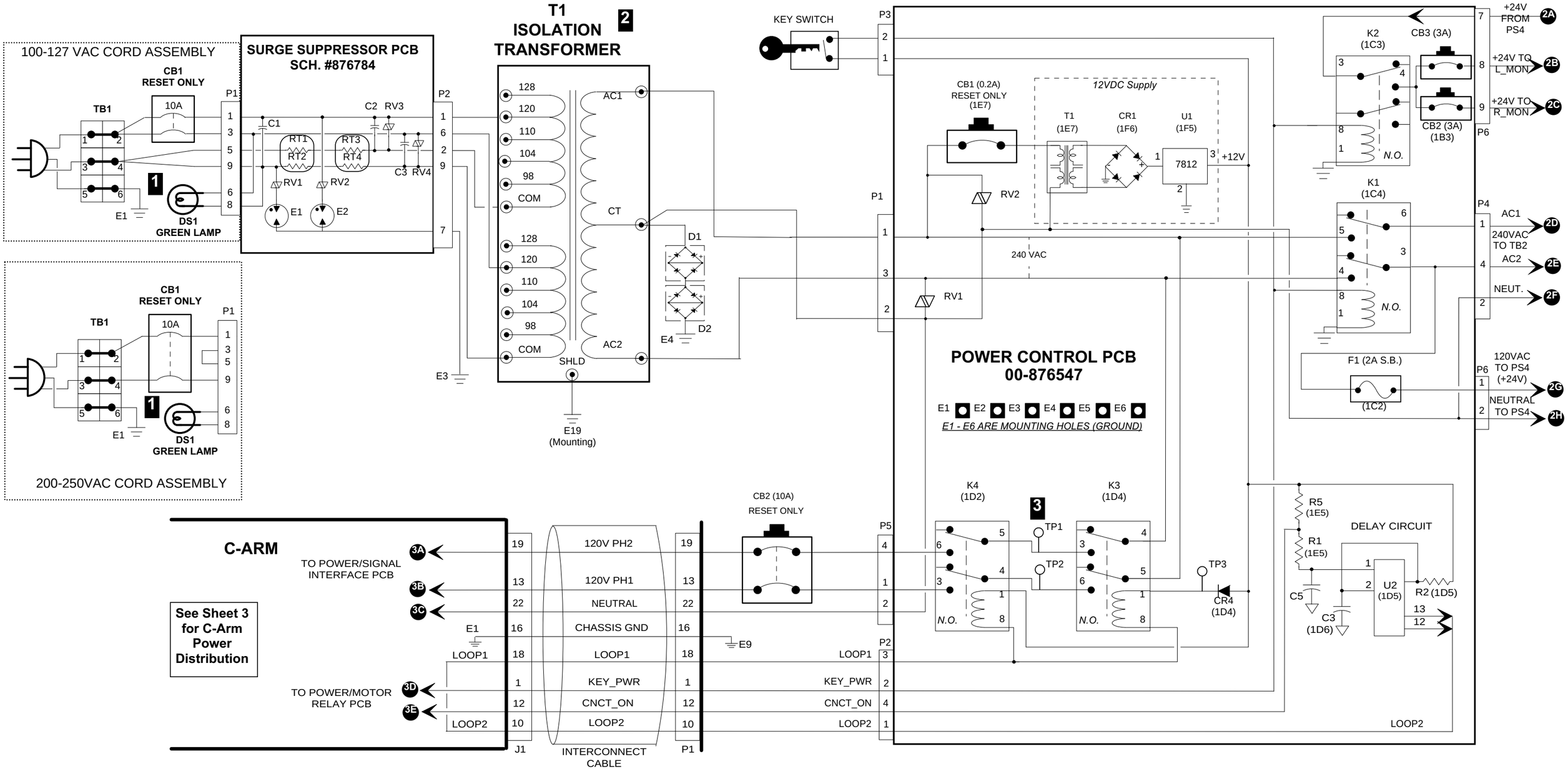

1 DS1 is a green light that turns on when the Power Cord is plugged into a wall outlet.

2 Strap T1 to match Hospital AC as follows:

220 -250 VAC Cord Assembly

Transformer TAP	98	104	110	Br 110 & Br/Wt 120	120	128
Input VAC Range	186 - 200	201 - 214	215 - 225	226-234	235-248	249-269

100 - 127 VAC Cord Assembly

Transformer TAP	98	104	110	120	128
Input VAC Range	94 -100	101 - 107	108 - 115	116-124	125-134

3 240 VAC between TP1 & TP2 when Workstation is plugged in to outlet and interconnect cable is connected to C-Arm

WORKSTATION INTERCONNECT DIAGRAM 876158

Use this drawing with system serial numbers 69-0001 to 69-1000

OEC MEDICAL SYSTEMS, INC Training	9600 C-Arm	
	For Reference Only	Page 1 of 3
	PWERBLK1.DS4	12/3/96

9600 System Power Distribution Functional Schematic

Workstation Distribution

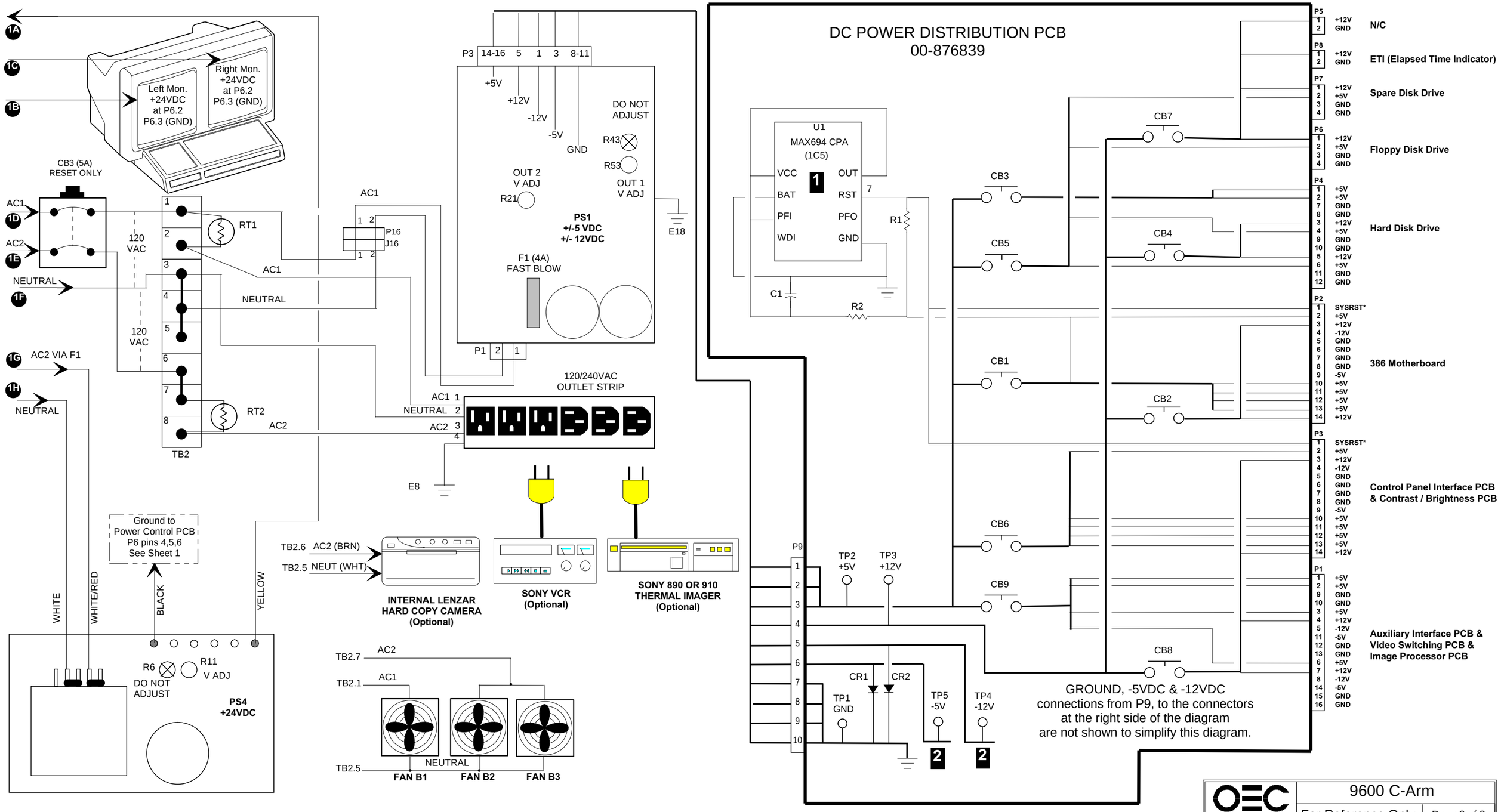

WORKSTATION INTERCONNECT DIAGRAM 876158

1 U1 monitors +5VDC. If it falls below 4.65VDC, U1.7 (SYSRST*) goes low resetting the 386 Motherboard. It goes high 200 mS after 4.7VCD is reached.

2 -5 and -12 VDC are NOT CIRCUIT BREAKER PROTECTED

Use this drawing with system serial numbers 69-0001 to 69-1000

OEC MEDICAL SYSTEMS, INC Training	9600 C-Arm	
	For Reference Only	Page 2 of 3
	PWERBLK1.DS4	12/3/96

9600 System Power Distribution Functional Schematic
Workstation Distribution

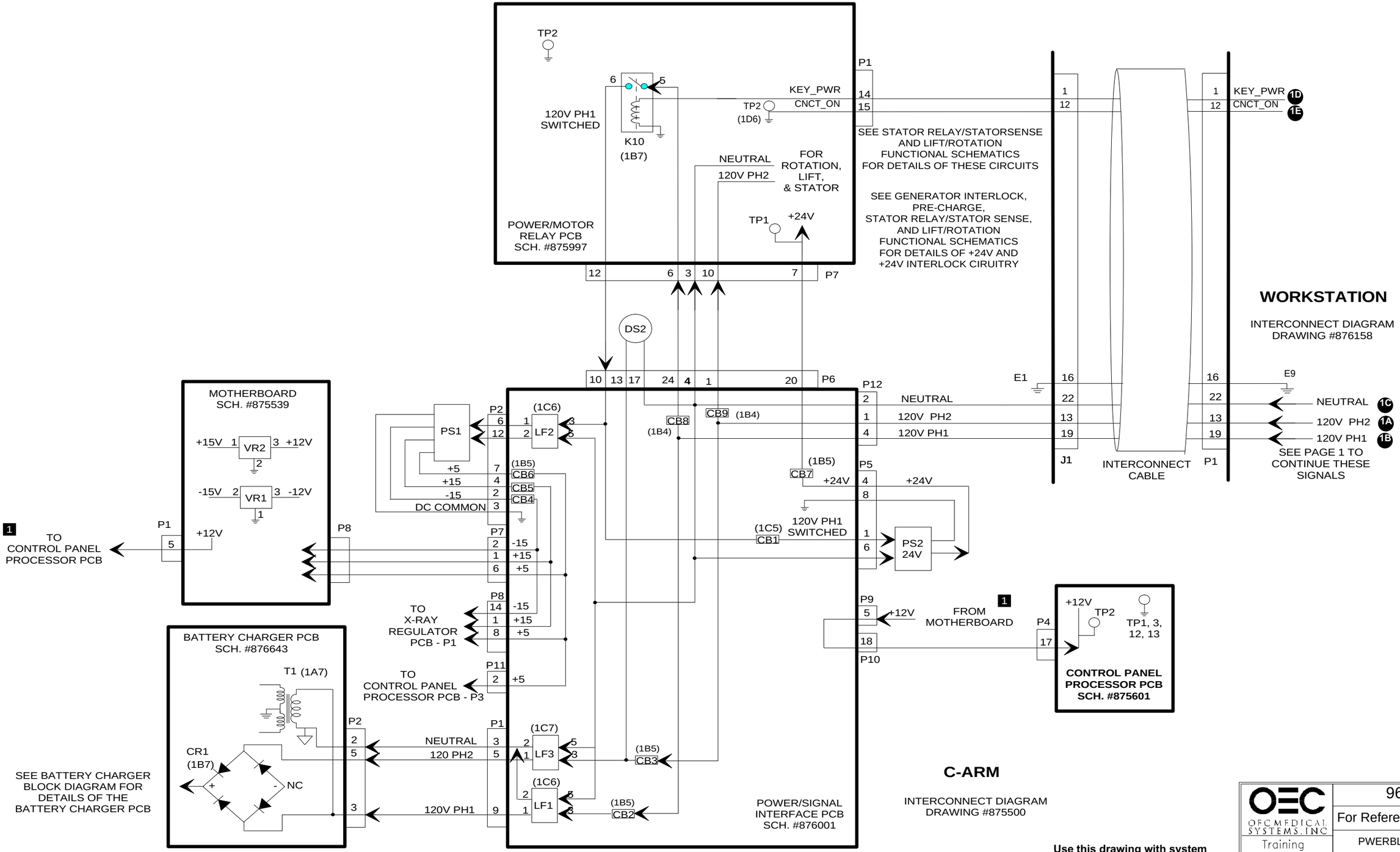

Use this drawing with system serial numbers 69-0001 to 69-1000

OEC MEDICAL SYSTEMS, INC Training	9600 C-Arm	
	For Reference Only	Page 3 of 3
	PWERBLK1.DS4	12/3/96

9600 System Power Distribution Functional Schematic

C-Arm Distribution

9600 Mobile Digital C-Arm - Generator Block Diagrams, Test Points, and Waveforms

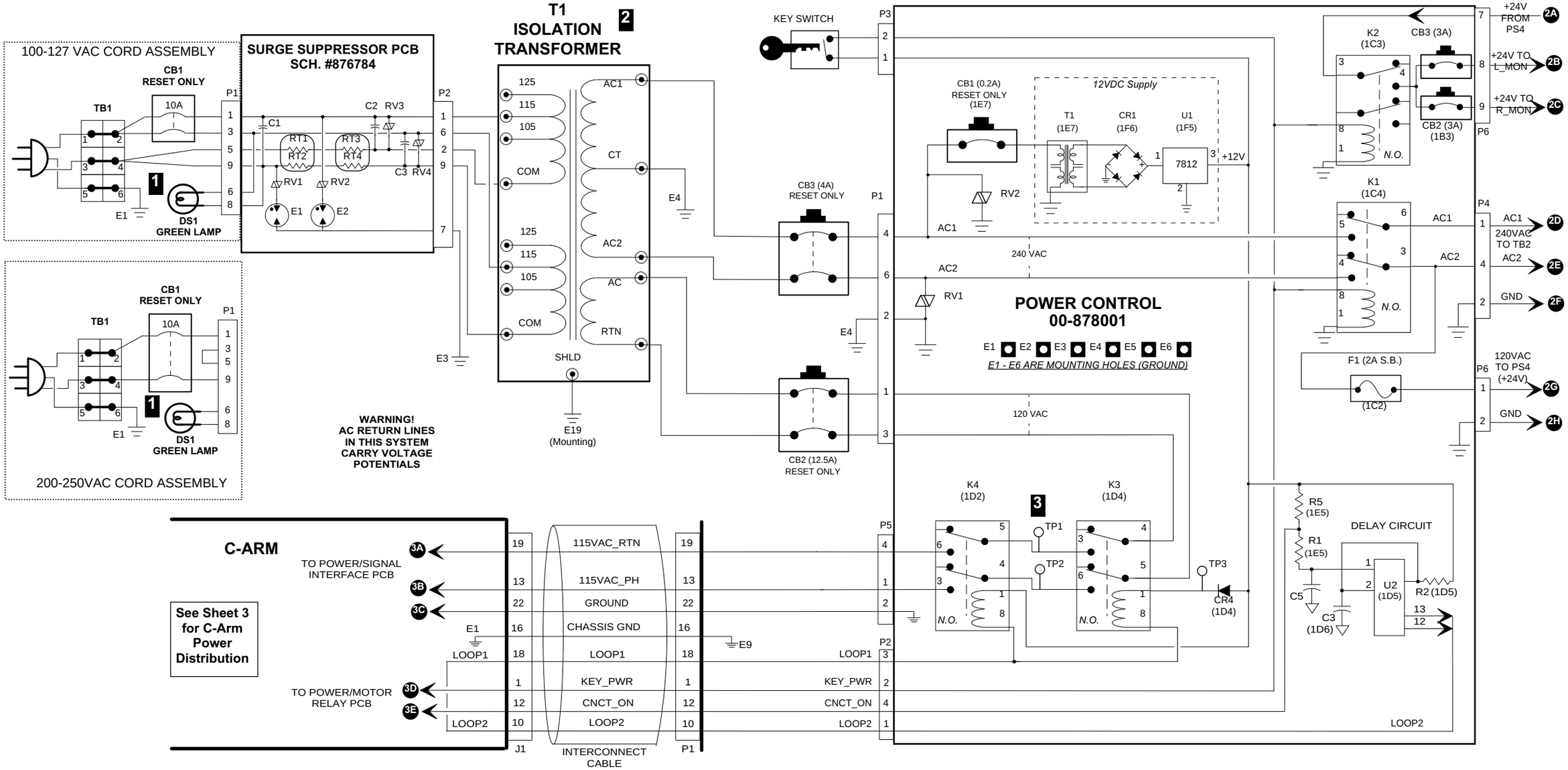

1 DS1 is a green light that turns on when the Power Cord is plugged into a wall outlet.

2 Strap T1 to match Hospital AC as follows:

220 -250 VAC Cord Assembly

Transformer TAP	105	115	125
Input VAC Range	196 - 214	215 - 234	235 - 254

100 - 127 VAC Cord Assembly

Transformer TAP	105	115	125
Input VAC Range	98 -107	108 - 117	118 - 127

3 120 VAC between TP1 & TP2 when Workstation is plugged into outlet and interconnect cable is connected to C-Arm.

WORKSTATION INTERCONNECT DIAGRAM 00-877970

USE THIS DRAWING WITH SYSTEM SERIAL NUMBERS 69-1001 AND HIGHER & 62-0001 AND HIGHER

OEC OF CO MEDICAL SYSTEMS, INC Training	9600 C-Arm	
	For Reference Only	Page 1 of 3
	PWERBLK2.DS4	9/19/96
System Power Distribution Functional Schematic Workstation Distribution		

9600 Mobile Digital C-Arm - Generator Block Diagrams, Test Points, and Waveforms

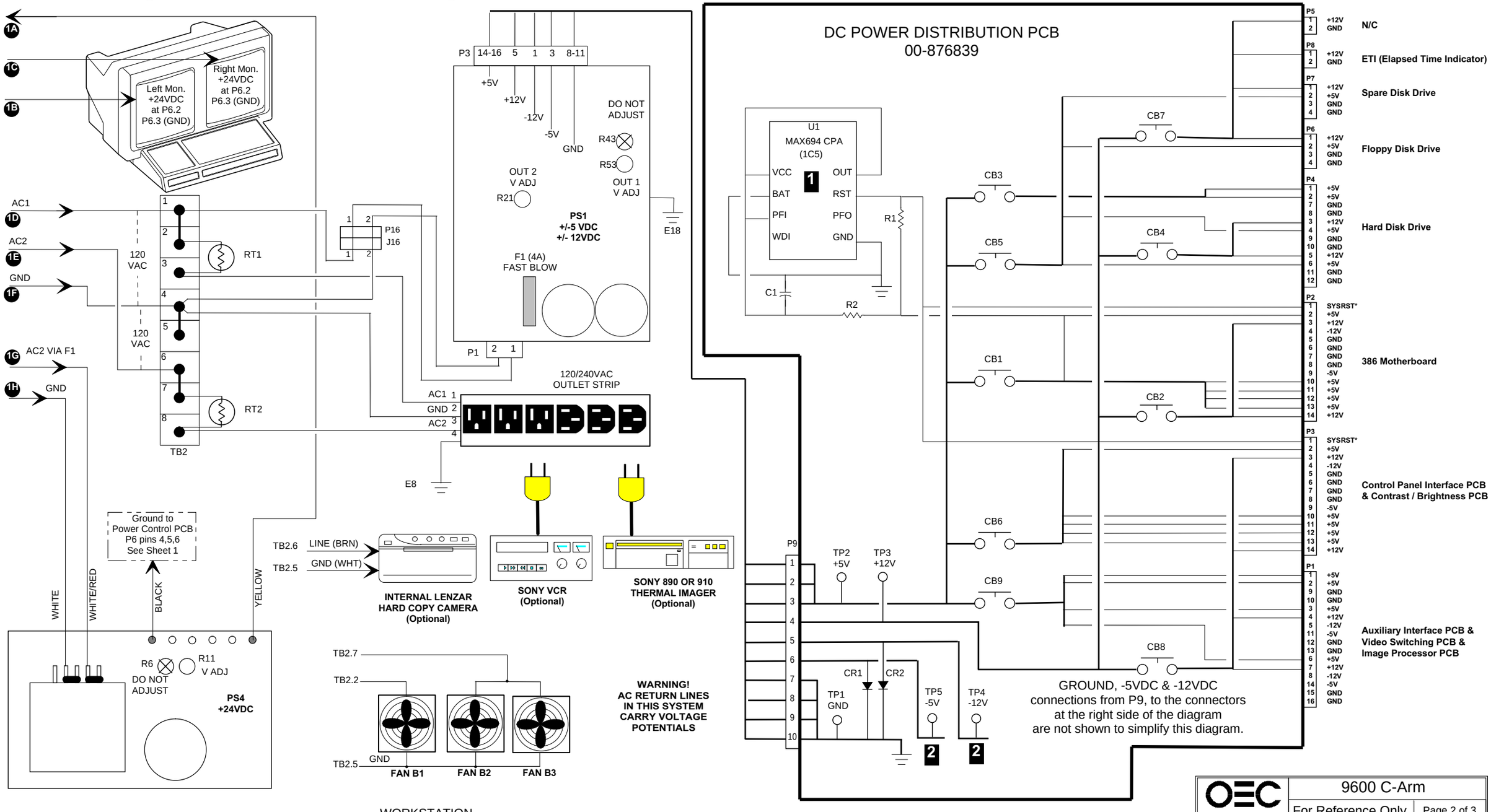

WORKSTATION INTERCONNECT DIAGRAM
00-877970

1 U1 monitors +5VDC. If it falls below 4.65VDC, U1.7 (SYSRST*) goes low resetting the 386 Motherboard. It goes high 200 mS after 4.7VCD is reached.

2 -5 and -12 VDC are NOT CIRCUIT BREAKER PROTECTED

USE THIS DRAWING WITH SYSTEM SERIAL NUMBERS 69-1001 AND HIGHER & 62-0001 AND HIGHER

OEC MEDICAL SYSTEMS, INC Training	9600 C-Arm	
	For Reference Only	Page 2 of 3
	PWERBLK2.DS4	9/19/96
System Power Distribution Functional Schematic Workstation Distribution		

9600 Mobile Digital C-Arm - Generator Block Diagrams, Test Points, and Waveforms

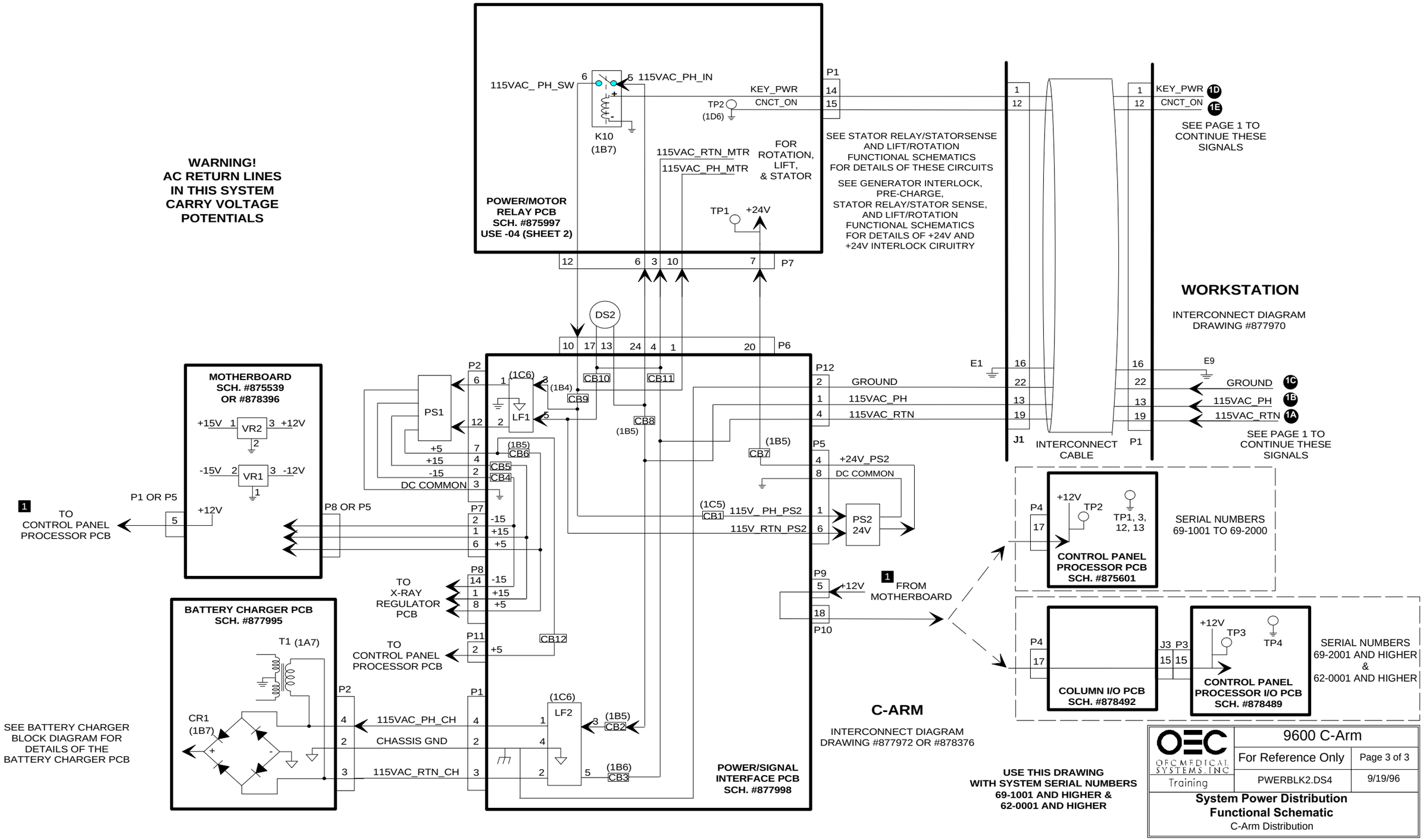

1 THE CONTROL PANEL DISPLAYS 19 ARROWS AT THIS TIME

CONTROL PANEL DISPLAY

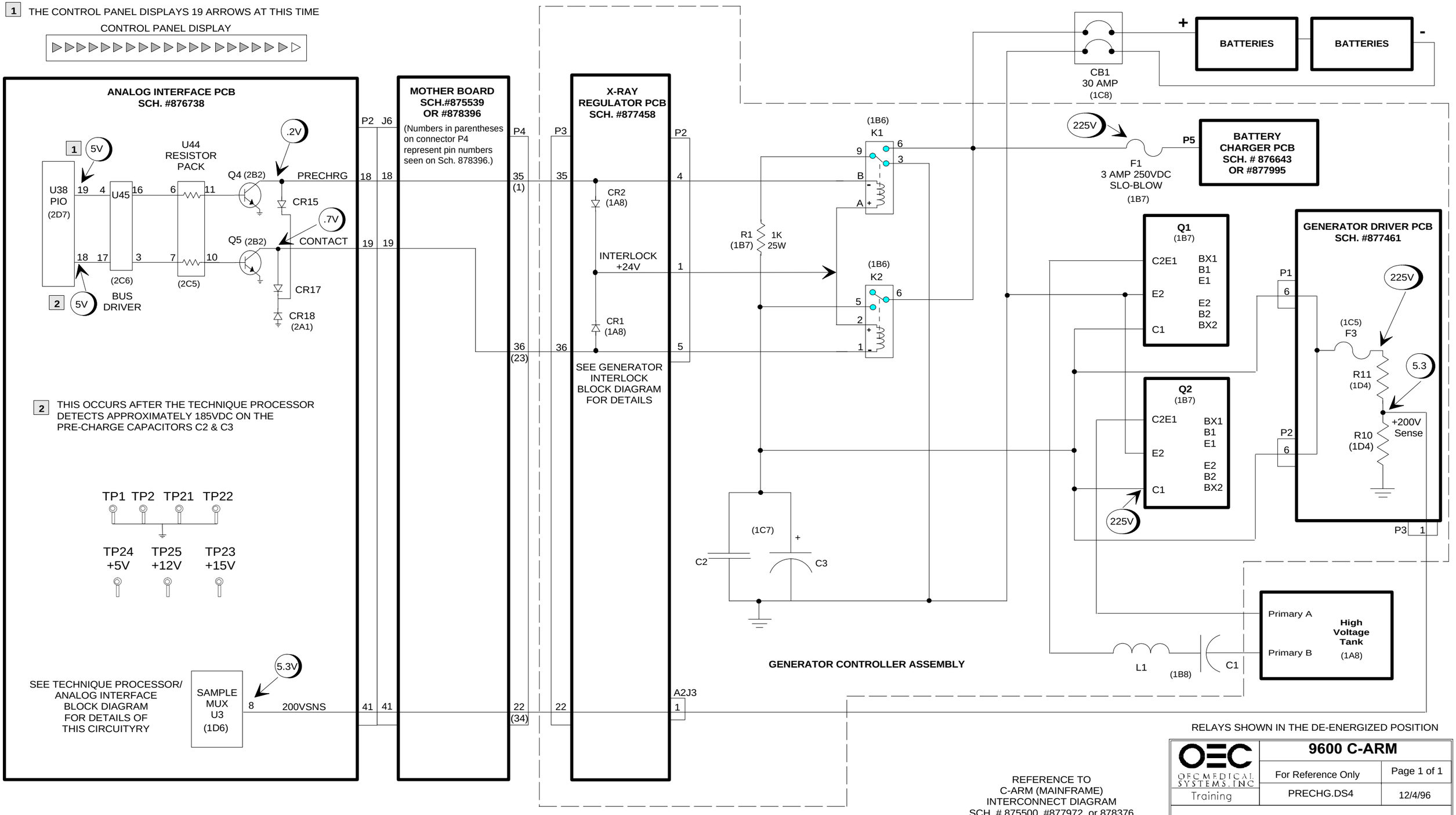

RELAYS SHOWN IN THE DE-ENERGIZED POSITION

OEC MEDICAL SYSTEMS, INC Training	9600 C-ARM	
	For Reference Only	Page 1 of 1
	PRECHG.DS4	12/4/96

PRE-CHARGE BLOCK DIAGRAM

9600 Mobile Digital C-Arm - Generator Block Diagrams, Test Points, and Signal Waveforms

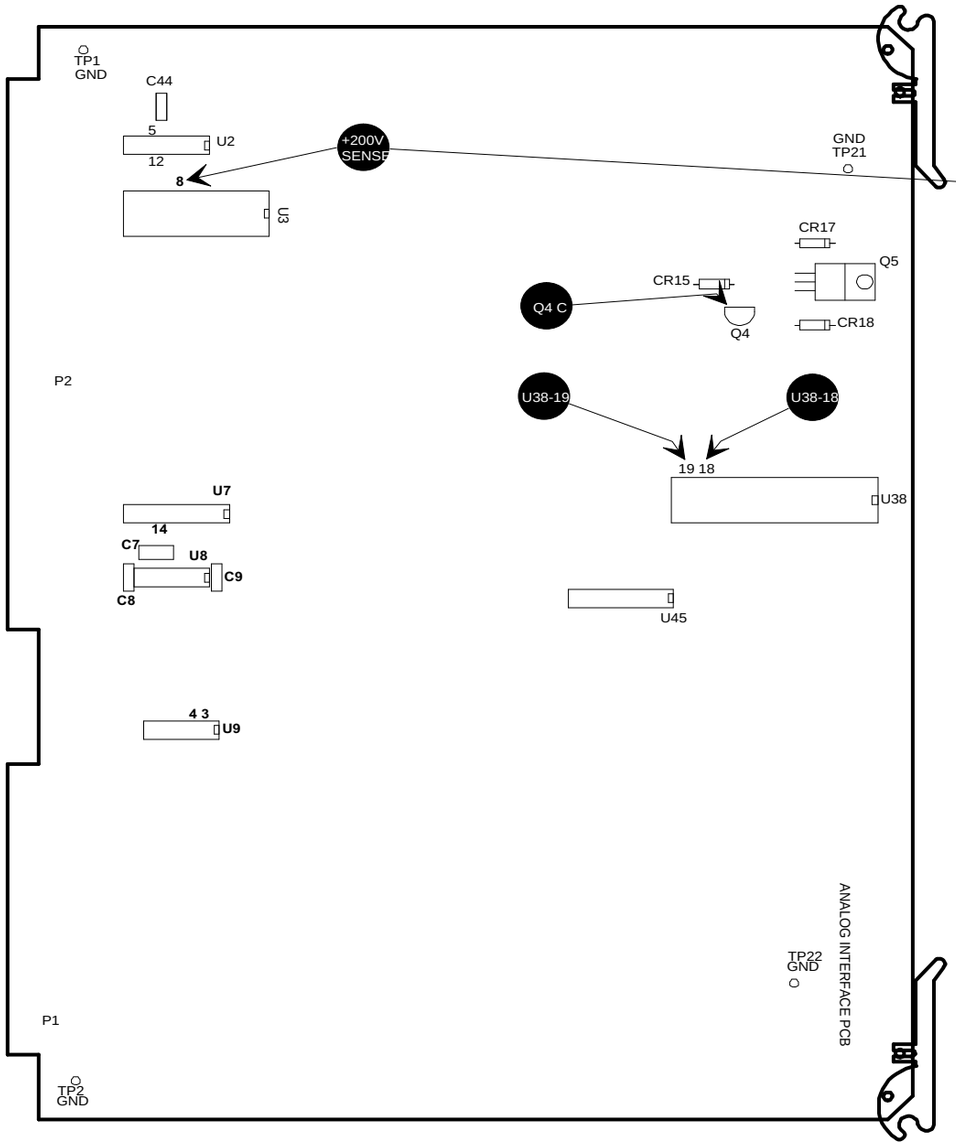

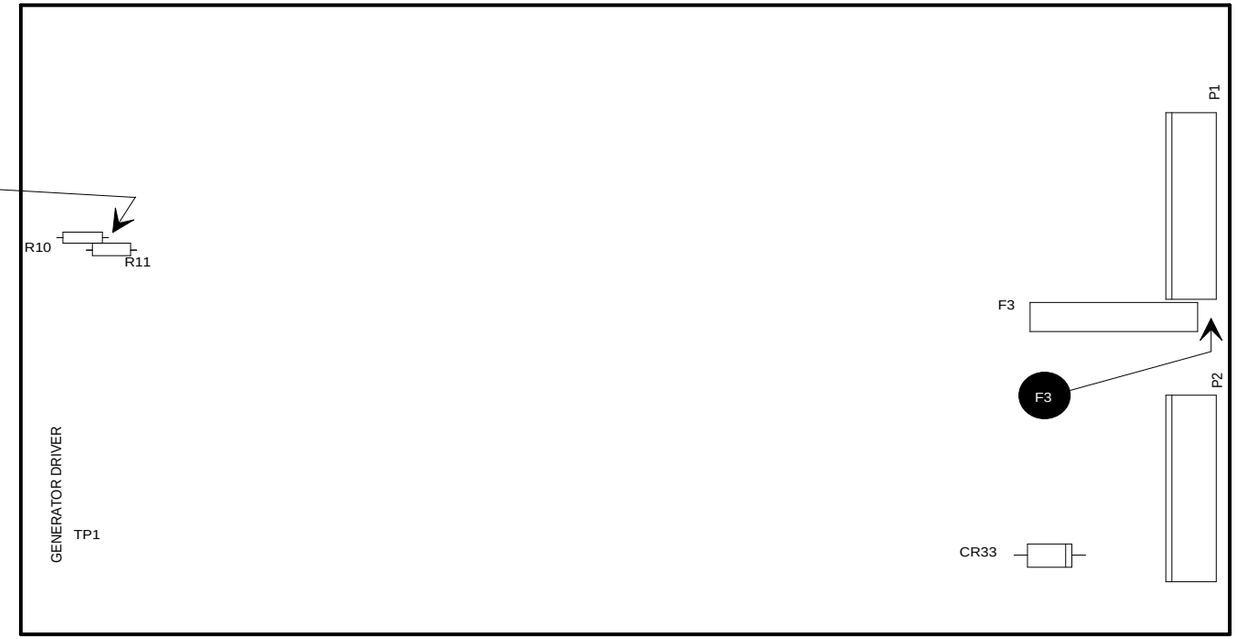

RISING EDGE =
B+ CHARGE STARTED

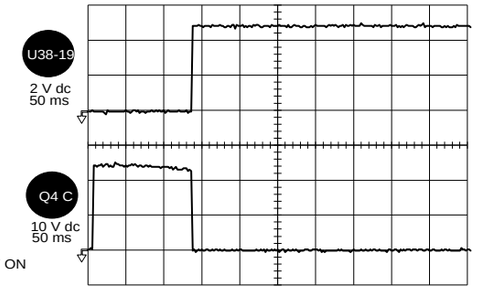

RISING EDGE =
+24V INTERLOCK ON

FALLING EDGE =
B+ CHARGE STARTED
K1 (PRECHARGE) RELAY ON

RISING EDGE =
B+ CHARGE STARTED

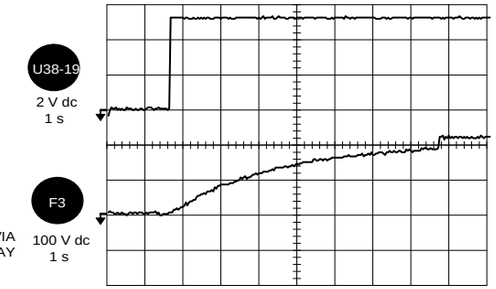

C2, C3 CHARGE VOLTAGE VIA
R1 & K1 IN GENERATOR TRAY

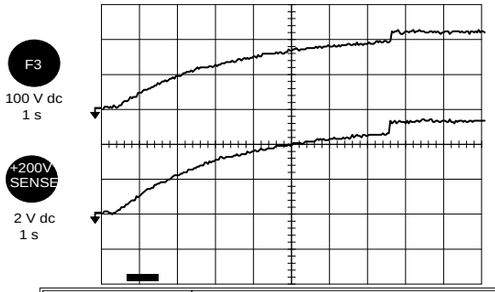

C2, C3 CHARGE VOLTAGE IS MEASURED BY U7 ADC VIA +200V SENSE FROM GENERATOR DRIVER PCB.

AS +200V SENSE REACHES APPROX. 4.6 VOLTS K2 (B+ CONTACTOR) IS TURNED ON BY U38-18 VIA Q5.

WITH K2 ON, THE VOLTAGE ON C2, C3 IS EQUAL TO THE BATTERY CHARGER VOLTAGE OF 225 VOLTS, WHICH RAISES THE VOLTAGE OF +200V SENSE TO 5.3 VOLTS. THIS TELLS THE SYSTEM THAT PRECHARGE HAS BEEN SUCESSFULLY COMPLETED.

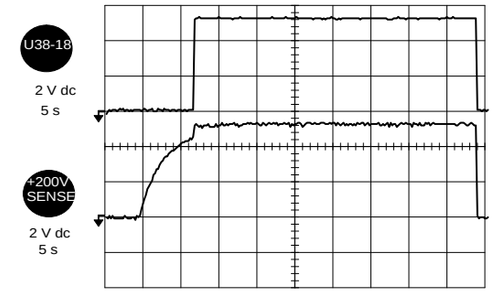

OFC MEDICAL SYSTEMS, INC Training	9600 C-ARM	
	For Reference Only	Page 1 of 1
	PRECHGSS.DS4	6/5/96
PRE-CHARGE CONTROL SIGNAL SHEET		

9600 Mobile Digital C-Arm - Generator Block Diagrams, Test Points, and Signal Waveforms

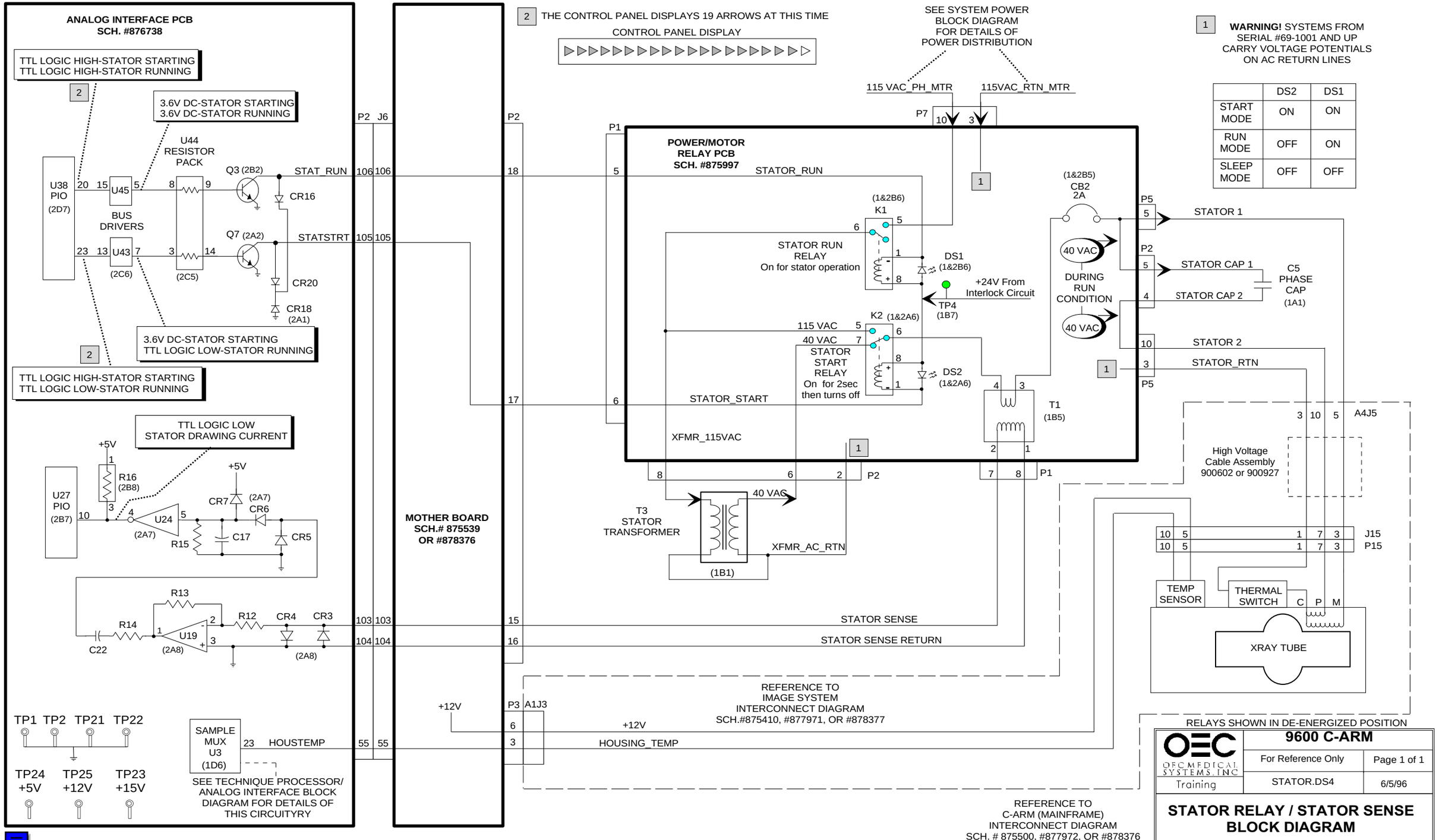

	DS2	DS1
START MODE	ON	ON
RUN MODE	OFF	ON
SLEEP MODE	OFF	OFF

9600 Mobile Digital C-Arm - Generator Block Diagrams, Test Points, and Signal Waveforms

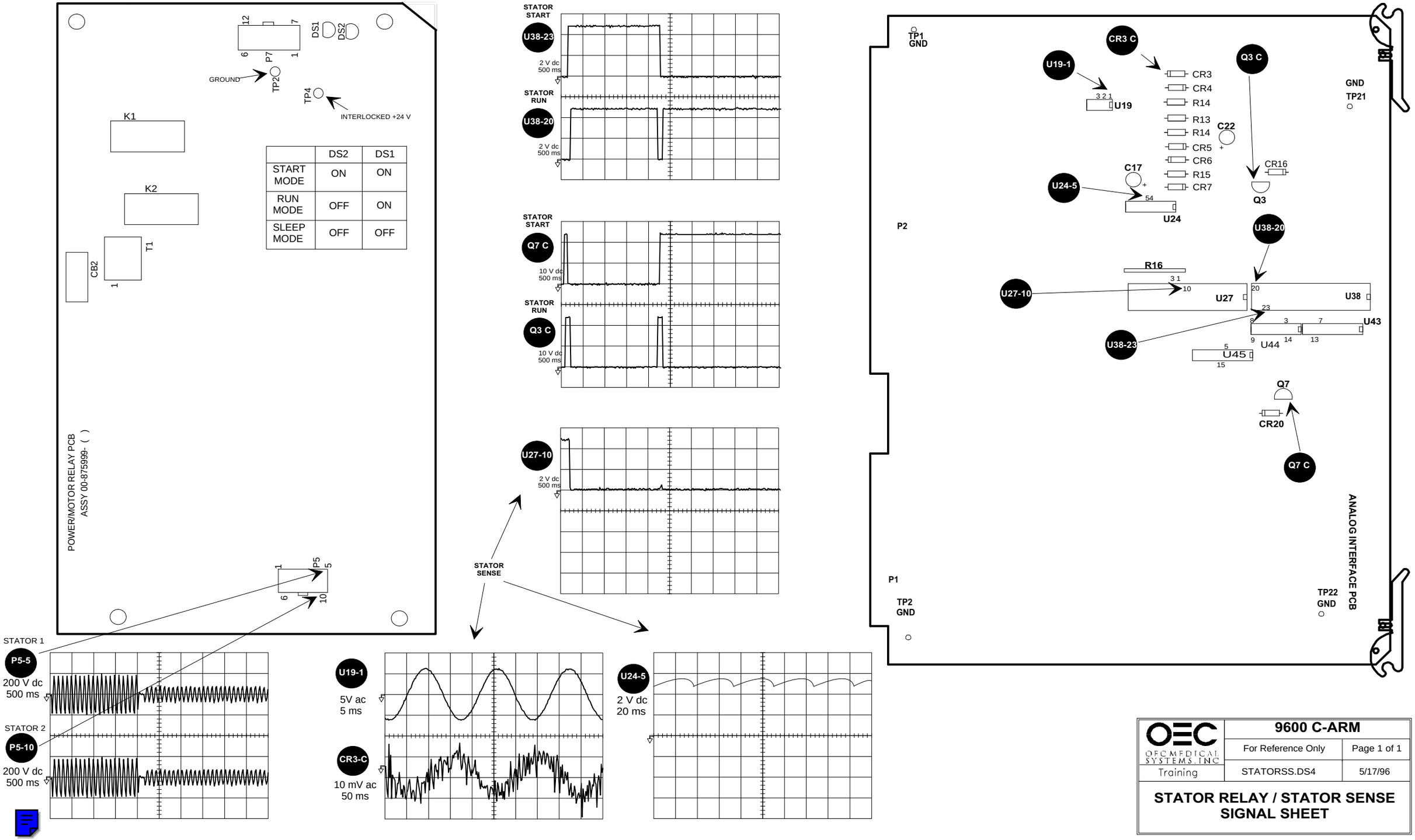

	DS2	DS1
START MODE	ON	ON
RUN MODE	OFF	ON
SLEEP MODE	OFF	OFF

OEC MEDICAL SYSTEMS, INC	9600 C-ARM	
	For Reference Only	Page 1 of 1
Training	STATORSS.DS4	5/17/96

STATOR RELAY / STATOR SENSE SIGNAL SHEET

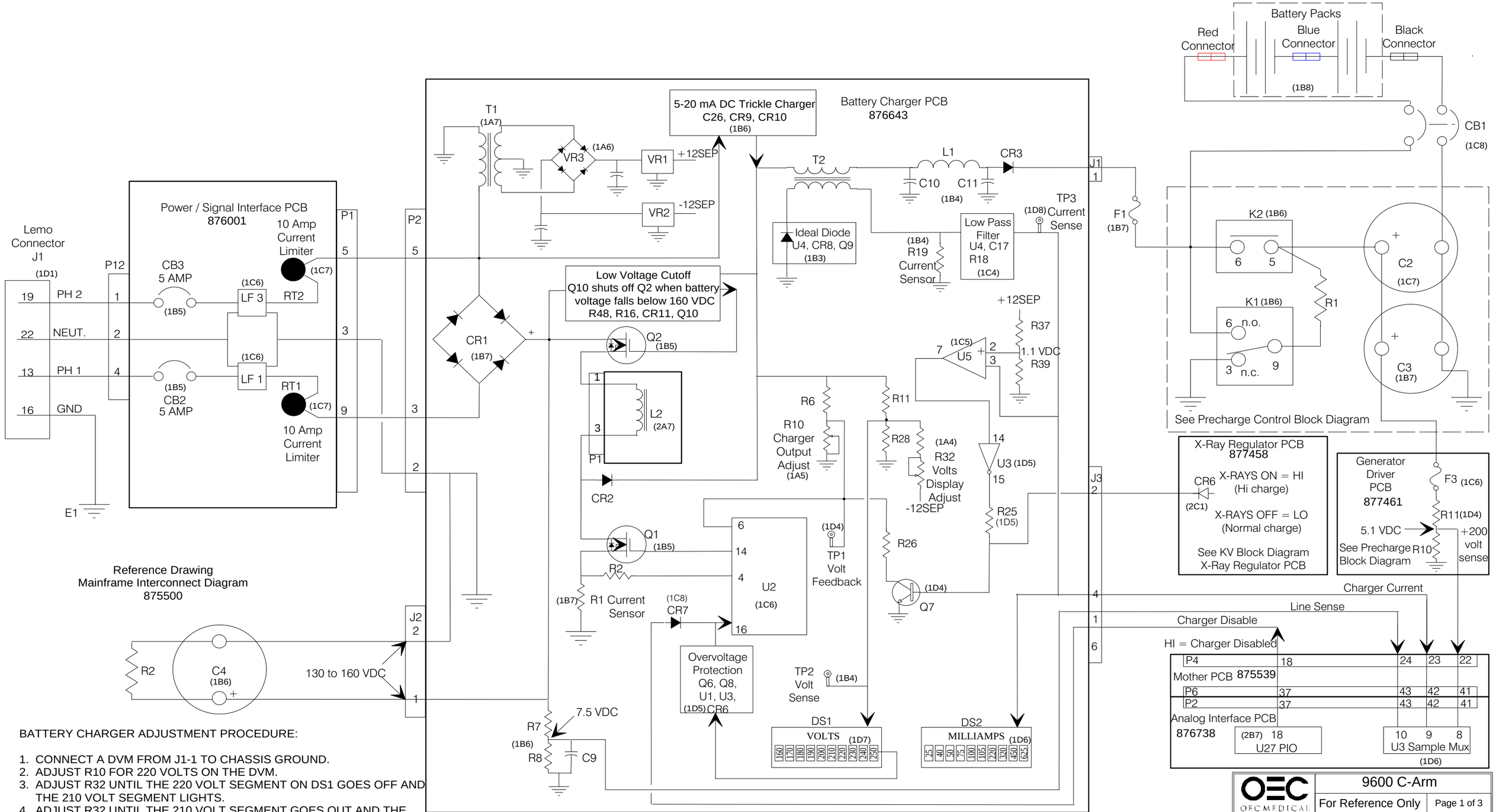

BATTERY CHARGER ADJUSTMENT PROCEDURE:

1. CONNECT A DVM FROM J1-1 TO CHASSIS GROUND.
2. ADJUST R10 FOR 220 VOLTS ON THE DVM.
3. ADJUST R32 UNTIL THE 220 VOLT SEGMENT ON DS1 GOES OFF AND THE 210 VOLT SEGMENT LIGHTS.
4. ADJUST R32 UNTIL THE 210 VOLT SEGMENT GOES OUT AND THE 220 VOLT SEGMENT JUST LIGHTS.
5. ADJUST R10 FOR 225 VOLTS ON THE DVM.

OEC MEDICAL SYSTEMS, INC. Training	9600 C-Arm	
	For Reference Only	Page 1 of 3
	CHGBLK.DS4	12/3/96
9600 Battery Charger Block Diagram Serial # 69-0001 to 69-1000		

BATTERY CHARGER ERROR MESSAGES

RECHARGE NEEDED -ALLOW 24 HOURS PRESS ANY KEY TO CONTINUE

THIS MESSAGE IS DISPLAYED DURING BOOT UP IF THE SYSTEM HAS NOT BEEN TURNED ON FOR 6 MONTHS.

IF 6 MONTHS HAVE PAST SINCE THE SYSTEM HAS BEEN PLUGGED IN AND TURNED ON, LET THE SYSTEM RUN WITHOUT MAKING X-RAYS FOR 24 HOURS TO ALLOW THE BATTERIES TO RECHARGE AND THE IMAGE TUBE TO DEGAS.

THIS ERROR MAY ALSO BE DISPLAYED AFTER INSTALLING A COPY OF THE BACKUP GENERATOR SOFTWARE, IN THIS CASE PRESS ANY KEY ON THE CONTROL PANEL AND CONTINUE USE AS NORMAL.

WARM-UP NEEDED - ALLOW 4 HOURS PRESS ANY KEY TO CONTINUE

THIS MESSAGE IS DISPLAYED DURING BOOT UP IF THE SYSTEM HAS NOT BEEN TURNED ON FOR 2 MONTHS.

IF 2 MONTHS HAVE PAST SINCE THE SYSTEM HAS BEEN PLUGGED IN AND TURNED ON, LET THE SYSTEM RUN WITHOUT MAKING X-RAYS FOR 4 HOURS TO ALLOW THE BATTERIES TO RECHARGE AND THE IMAGE TUBE TO DEGAS.

THIS ERROR MAY ALSO BE DISPLAYED AFTER INSTALLING A COPY OF THE BACKUP GENERATOR SOFTWARE, IN THIS CASE PRESS ANY KEY ON THE CONTROL PANEL AND CONTINUE USE AS NORMAL.

BATTERY DISCONNECTED

THIS MESSAGE IS DISPLAYED DURING BOOT UP (-1 ARROWS) IF THE SOFTWARE THINKS THE BATTERIES ARE DISCONNECTED.

THIS IS CHECKED BY DISABLING THE BATTERY CHARGER AND WAITING FOR 2 SECONDS, THE +200 VOLT SENSE LINE IS THEN READ. IF 180 VOLTS OR LESS IS READ, THE SOFTWARE ISSUES A SHUTDOWN COMMAND AND DISPLAYS THE " BATTERIES DISCONNECTED" MESSAGE.

IF THE BATTERIES ARE DISCONNECTED OR CB1 IS OPEN THE ERROR "PRECHARGE FAIL" MAY BE DISPLAYED INSTEAD OF BATTERIES DISCONNECTED.

CHARGER FAILED

THIS MESSAGE IS DISPLAYED IF THE SOFTWARE SENSES THAT THE BATTERY VOLTAGE IS LESS THAN 225 VOLTS AND THAT THE CHARGER OUTPUT CURRENT IS LESS THAN 1.0 AMPS.

THE SOFTWARE CHECK FOR CHARGER FAILURE RUNS IN THE BACKGROUND ALL THE TIME EXCEPT DURING X-RAYS.

70% CHARGE

THIS MESSAGE IS DISPLAYED IF THE SOFTWARE THINKS THAT THE CHARGE CAPACITY OF THE BATTERIES HAS BEEN DEPLETED TO 70% OR LESS.
THE 70% CHARGE MESSAGE IS DISPLAYED INTERMITTANTLY ON THE CONTROL PANEL AND DOES NOT AFFECT SYSTEM OPERATION.

50% CHARGE

THIS MESSAGE IS DISPLAYED IF THE SOFTWARE THINKS THAT THE CHARGE CAPACITY OF THE BATTERIES HAS BEEN DEPLETED TO 50% OR LESS.

THE 50% CHARGE MESSAGE IS DISPLAYED INTERMITTANTLY ON THE CONTROL PANEL, SYSTEM OPERATION IN FLUORO MODE IS ALLOWED BUT FILM EXPOSURES ARE SUSPENDED UNTIL THE CALCULATED CHARGE OF THE BATTERIES RISES ABOVE 50%.

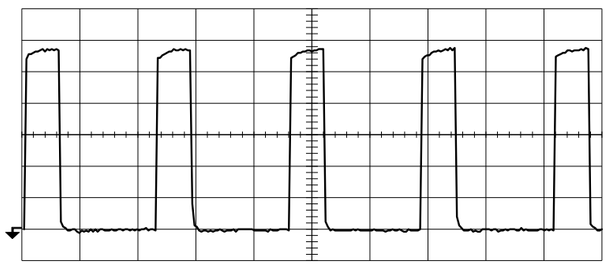

2 V dc
20 us

PWM OUTPUT DRIVE PULSES TO Q1

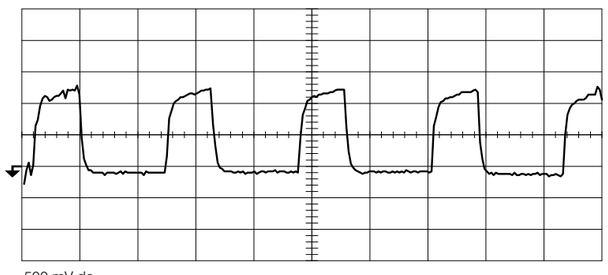

500 mV dc
20 us

CURRENT SENSOR INPUT TO PWM

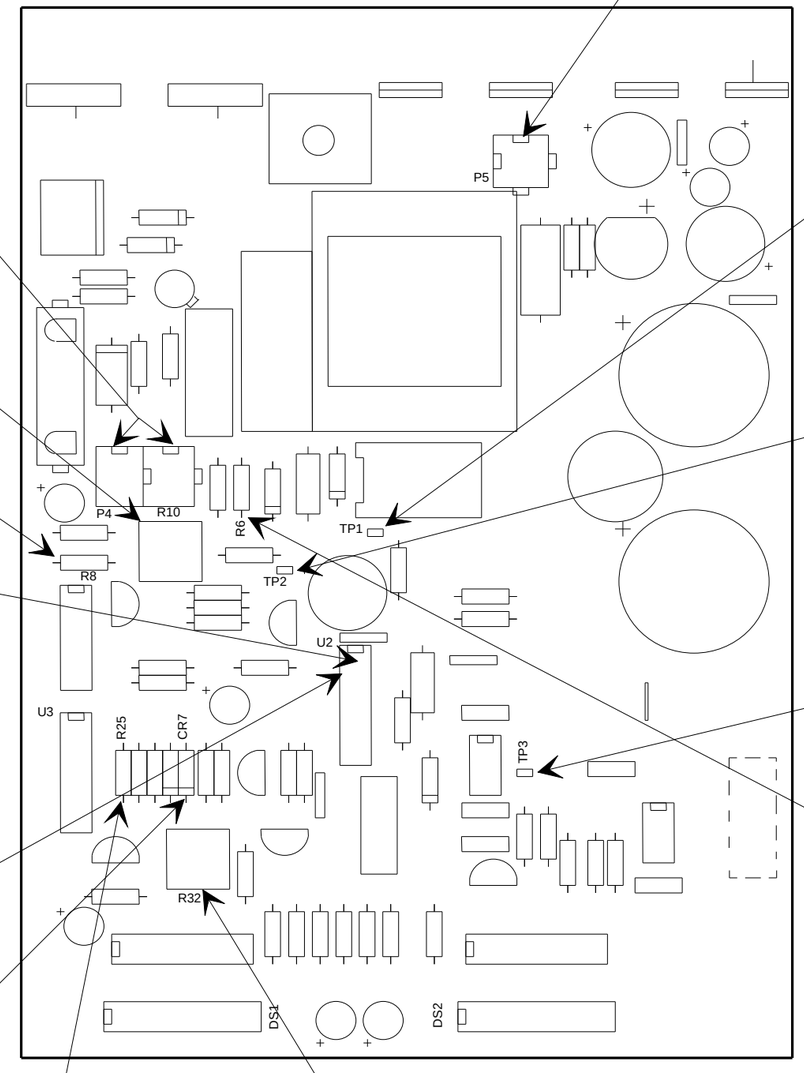

P5 CHARGER OUTPUT
NORMAL = 225 VDC
HI CHARGE = 230 VDC

REMEMBER, CHARGER OUTPUT VOLTAGE IS MEASURED THRU +200 SENSE (R11/R10 JUNCTION ON GENERATOR DRIVER PCB TO U3-8 ON ANALOG INTERFACE PCB)

C-4 FILTER CAP VOTAGE
MIN. LOAD = 160 VDC
MAX. LOAD = 130 VDC

TP1 VOLTAGE FEEDBACK
NORMAL = 5.15 VDC (MIN. CURRENT)
HI CHARGE = 4.55 VDC (MAX. CURRENT)

R10 CHARGER OUTPUT VOLTAGE ADJSUTMENT

R8 LINE SENSE
7.5 VDC = NORMAL
LINE VOLTAGE

TP2 VOLT SENSE
NORMAL = 3.3 VDC
(CHARGER OUTPUT @ 225 VDC)

HI CHARGE = 4.2 VDC
(CHARGER OUTPUT @ 230 VDC)

U2-14

TP3 CURRENT SENSE
MIN. CURRENT = .08 VDC
(CHARGER OUTPUT = 25 MA)

MAX. CURRENT = 5.2 VDC
(CHARGER OUTPUT = 2.5 AMPS)

U2-4

R6
CHARGER OUTPUT

R25
HIGH CHARGE MODE

CR7 CATHODE "CHARGER DISABLE"
CHARGER ON = 0 VDC (THE CHARGER IS ON ALL THE TIME EXCEPT DURING
CHARGER OFF = 3 VDC DURING FILM EXPOSURES AND FOR A SHORT TIME
TIME AT THE END OF THE STSTEM BOOT PROCESS.)

R32 VOLTAGE DISPLAY ADJUSTMENT

THIS PAGE GIVES THE LAYOUT FOR THE 877997 PCB. REFER TO THE POWER DISTRIBUTION SECTION IN THE SERVICE MANUAL FOR THE OLDER PCB LAYOUT.

OEC MEDICAL SYSTEMS, INC Training	9600 C-Arm	
	For Reference Only	Page 2 of 3
	CHGBLK.DS4	12/3/96
9600 Battery Charger Signal Sheet		

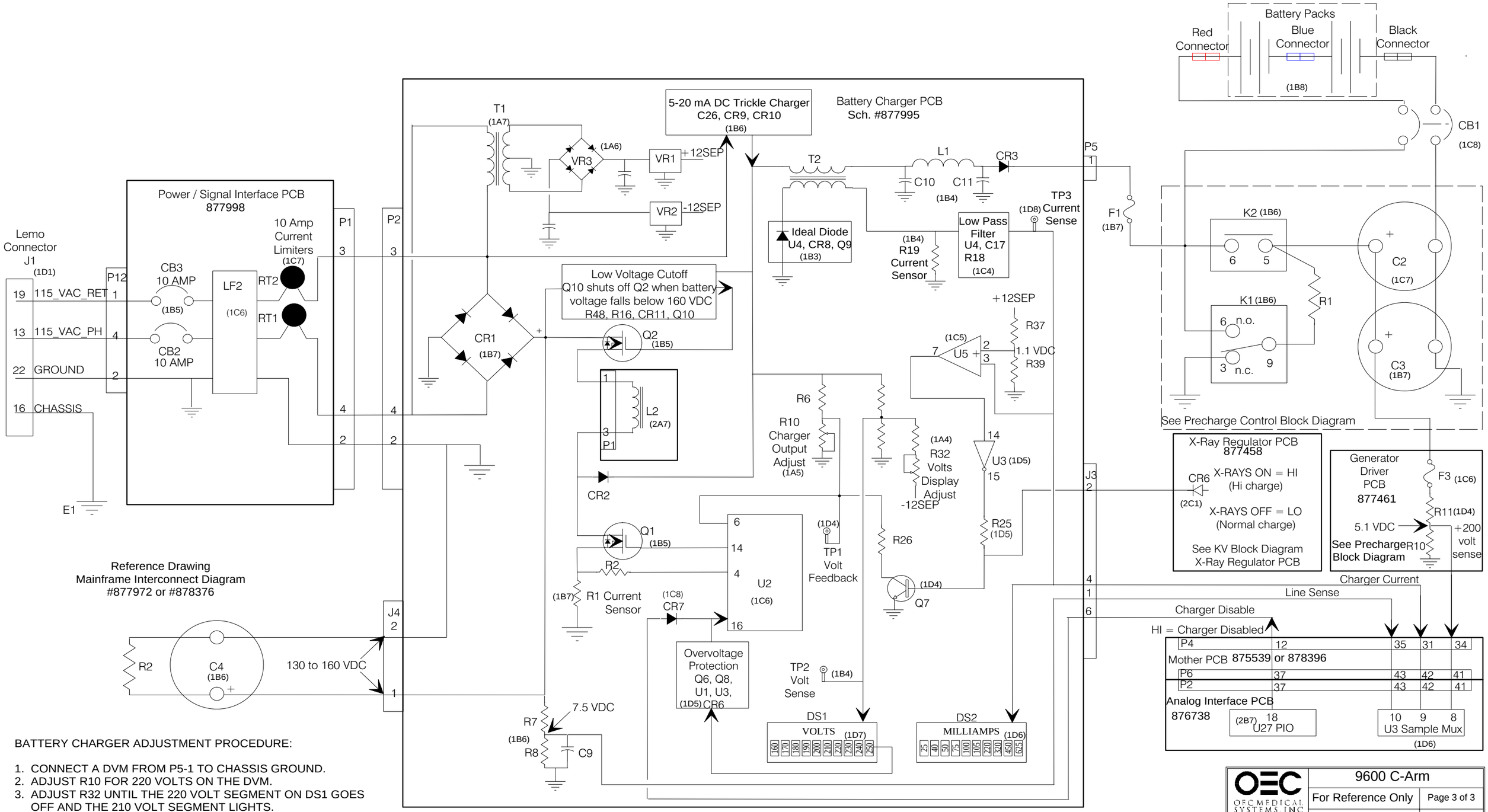

BATTERY CHARGER ADJUSTMENT PROCEDURE:

1. CONNECT A DVM FROM P5-1 TO CHASSIS GROUND.
2. ADJUST R10 FOR 220 VOLTS ON THE DVM.
3. ADJUST R32 UNTIL THE 220 VOLT SEGMENT ON DS1 GOES OFF AND THE 210 VOLT SEGMENT LIGHTS.
4. ADJUST R32 UNTIL THE 210 VOLT SEGMENT GOES OUT AND THE 220 VOLT SEGMENT JUST LIGHTS.
5. ADJUST R10 FOR 225 VOLTS ON THE DVM.

OEC MEDICAL SYSTEMS, INC. Training	9600 C-Arm	
	For Reference Only	Page 3 of 3
	CHGBLK.DS4	12/3/96
9600 Battery Charger Block Diagram Serial # 69-1001 and Higher		

9600 Mobile Digital C-Arm - Generator Block Diagrams, Test Points, and Waveforms

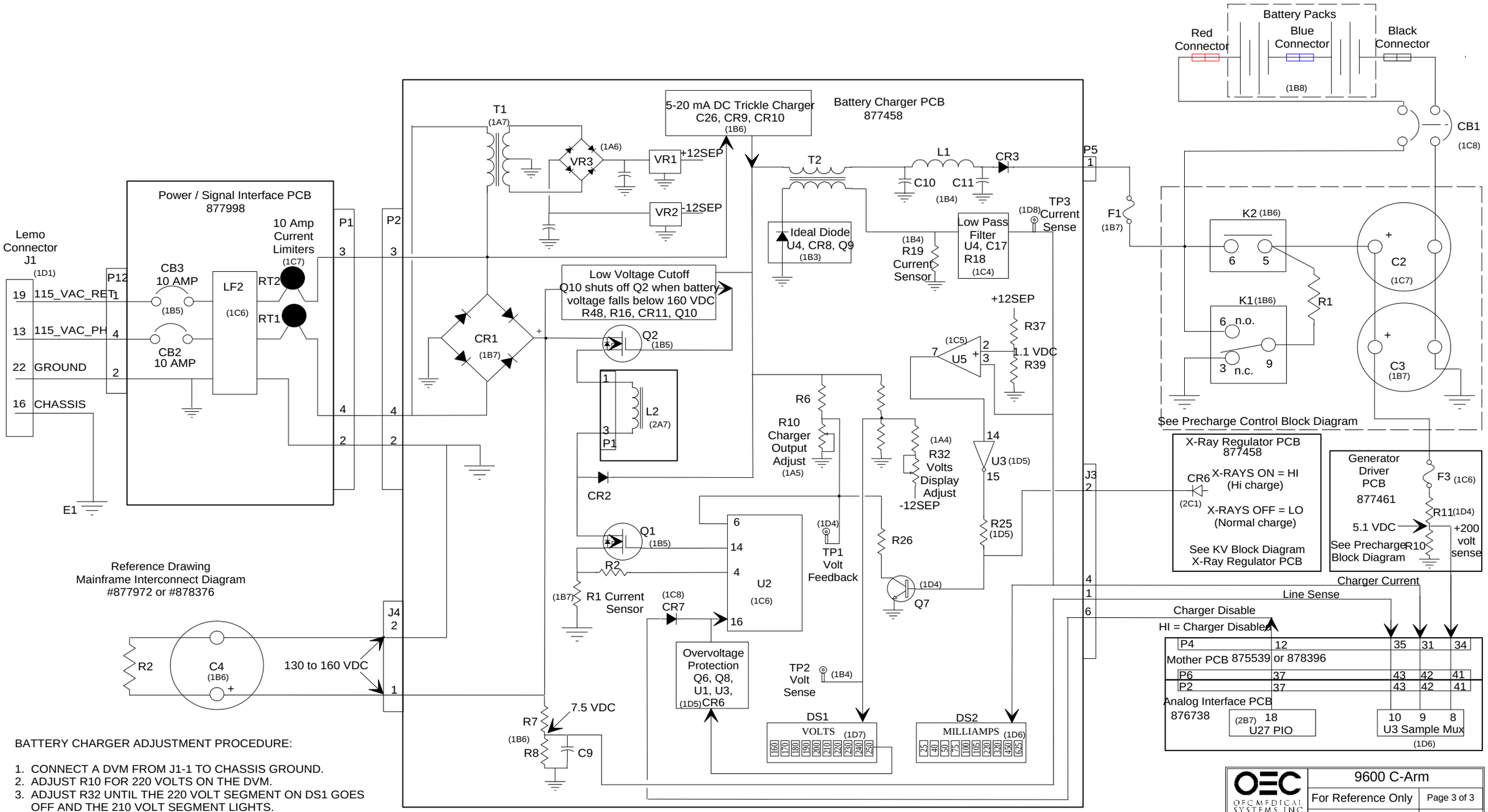

BATTERY CHARGER ADJUSTMENT PROCEDURE:

1. CONNECT A DVM FROM J1-1 TO CHASSIS GROUND.
2. ADJUST R10 FOR 220 VOLTS ON THE DVM.
3. ADJUST R32 UNTIL THE 220 VOLT SEGMENT ON DS1 GOES OFF AND THE 210 VOLT SEGMENT LIGHTS.
4. ADJUST R32 UNTIL THE 210 VOLT SEGMENT GOES OUT AND THE 220 VOLT SEGMENT JUST LIGHTS.
5. ADJUST R10 FOR 225 VOLTS ON THE DVM.

OEC MEDICAL SYSTEMS, INC. Training	9600 C-Arm	
	For Reference Only	Page 3 of 3
	CHGBLK.DS4	6/4/96
9600 Battery Charger Block Diagram Serial # 69-1001 and Higher		

9600 Mobile Digital C-Arm - Generator Block Diagrams, Test Points, and Waveforms

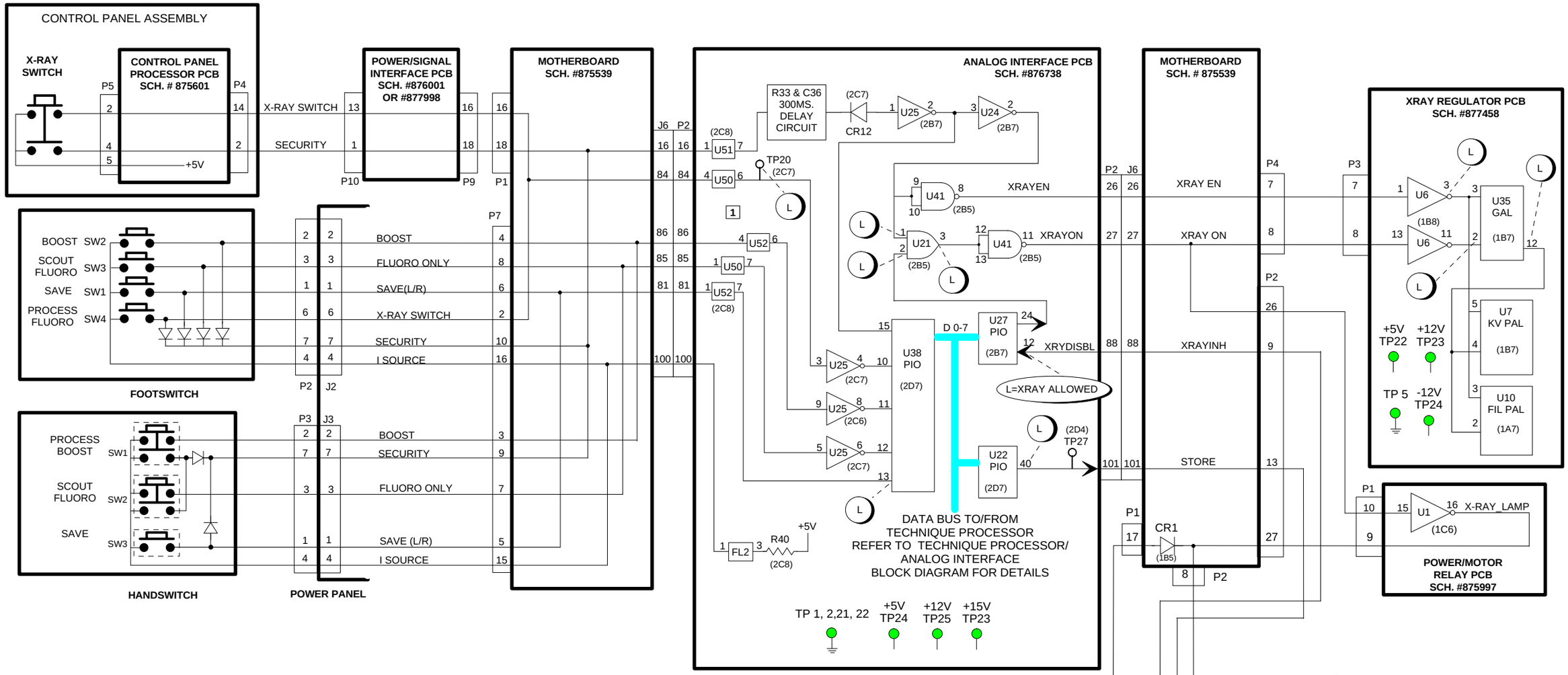

OEC MEDICAL SYSTEMS, INC Training	9600 C-ARM	
	For Reference Only	Page 1 of 3
	XRAY_ON.DS4	6/20/96
XRAY-ON / DISABLE		

9600 Mobile Digital C-Arm - Generator Block Diagrams, Test Points, and Waveforms

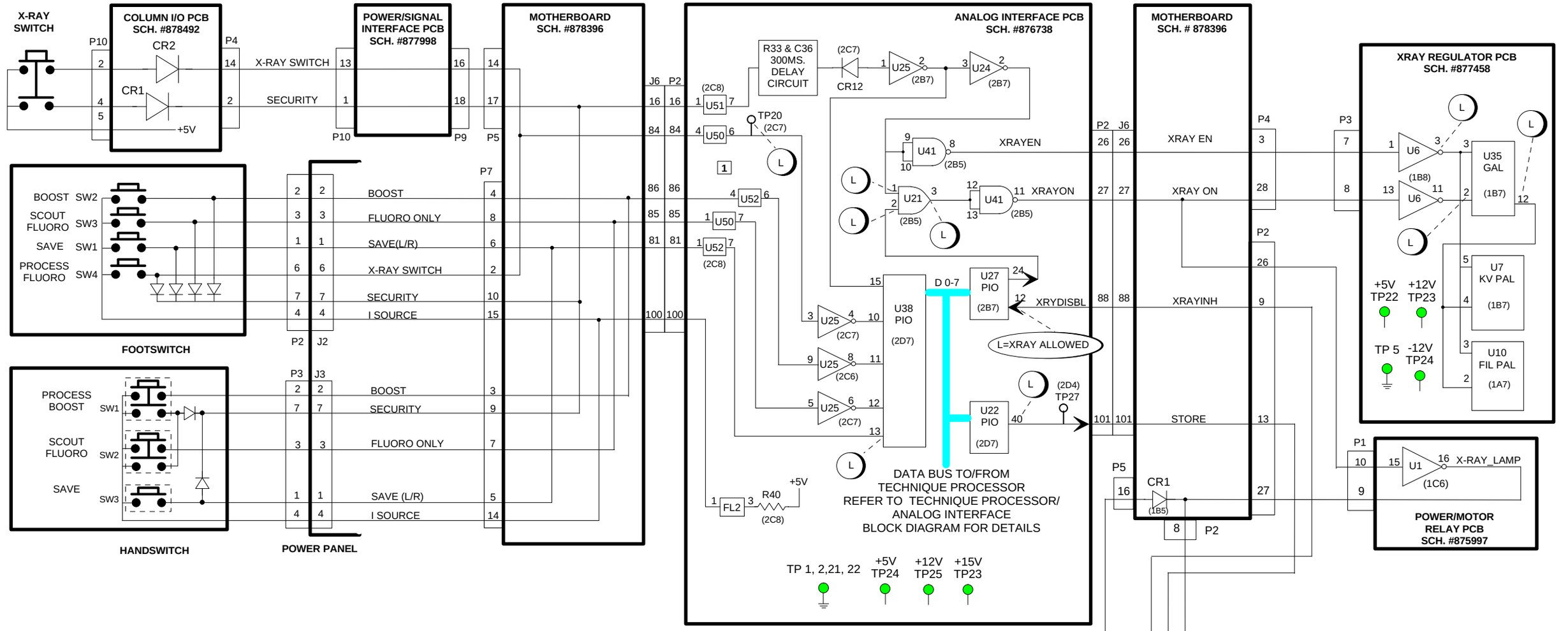

9600 Mobile Digital C-Arm - Generator Block Diagrams, Test Points, and Signal Waveforms

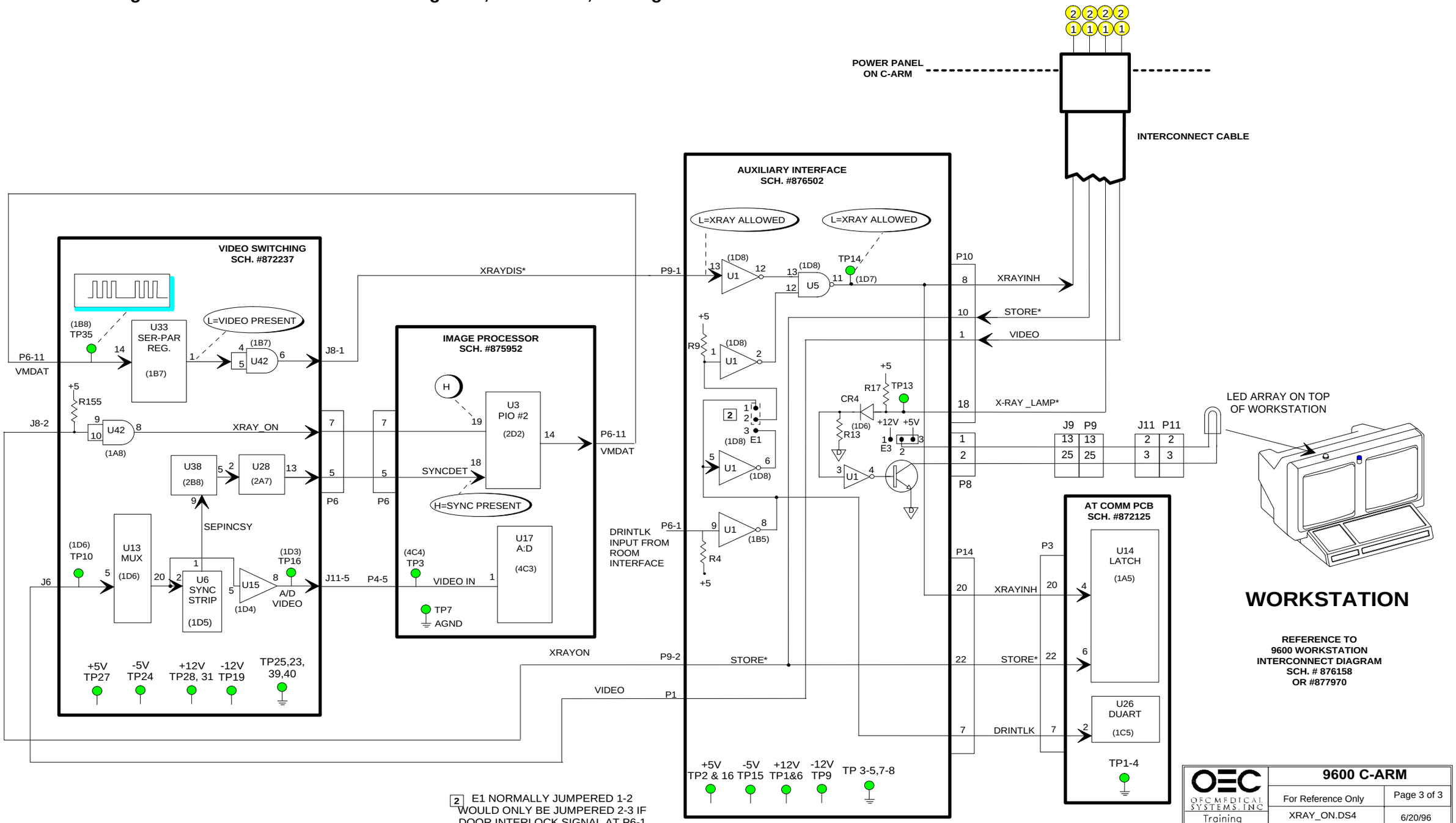

ANALOG INTERFACE PCB

U41-8 XRAYEN

Normally low, goes high when Boost, Scout, Process, Fluoro or control panel X-RAY Switch is pressed.

U41-11 XRAYON

Normally low, goes high when U27-24 CPU Verified X-ray goes low after Boost, Scout, Process, Fluoro or control panel X-ray Switch is pressed.

TP28 VIDSTBL

Normally low, goes high when X-rays are turned on until video level stabilizes then goes low.

TP27 STORE

Normally High,
goes Low when X-rays are on,
goes High when X-rays are off.
Last Image Hold = High

U27-24 (CPU Verified X-ray On)

Normally high, goes low when CPU receives X-ray on command from U38-10 (XRAYSW)

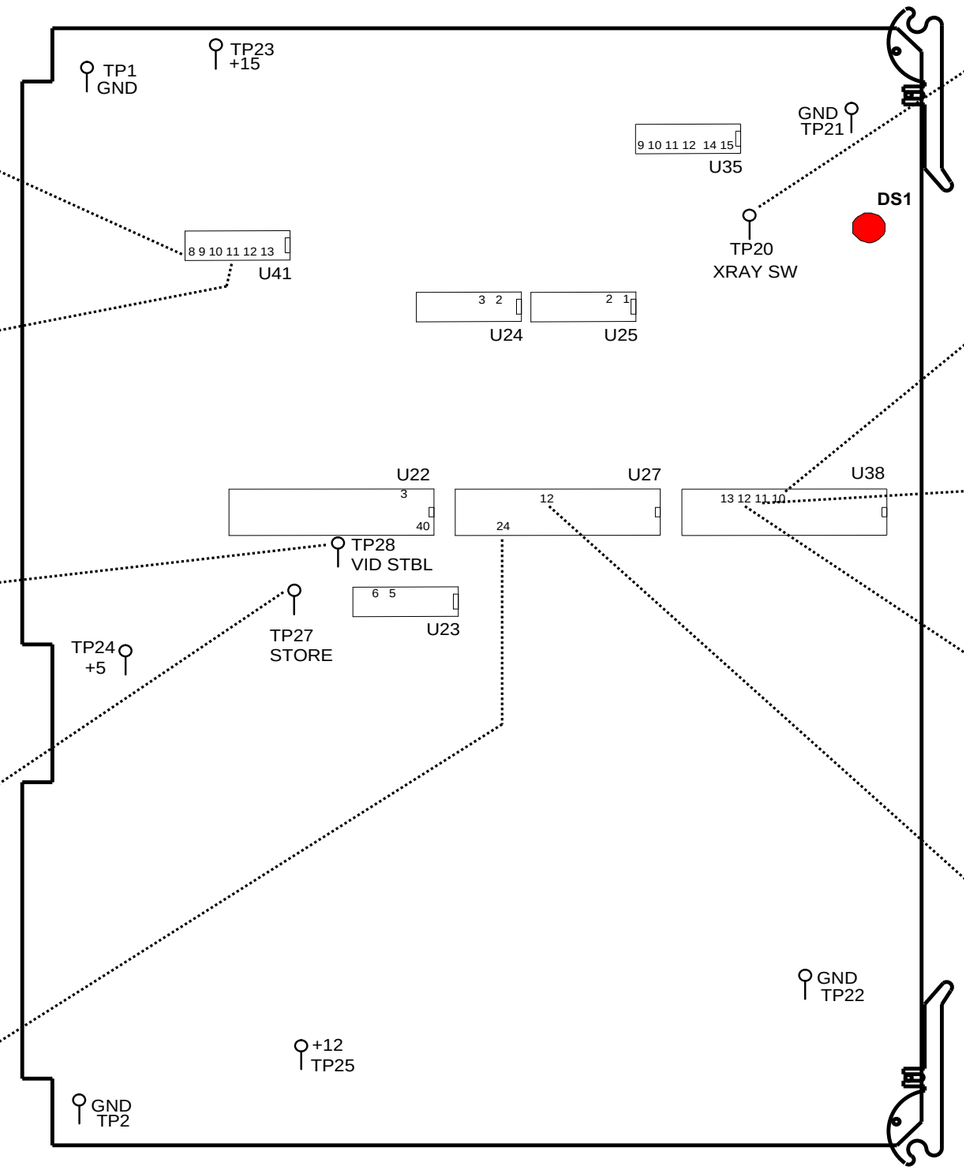

TP20 XRAYSW

Normally high, goes low when Process Fluoro footswitch or control panel X-ray switch is pressed.

U38-10 (X-RAY SW)

Normally low, goes high when Process Fluoro footswitch or control panel X-ray switch is pressed.

U38-11 (BOOST)

Normally low, goes high when Boost is pressed.

U38-12 (SCOUT FLUORO)

Normally low, goes high when Scout is pressed.

U27-12 (X-RAY DISABLE)

Normally low, goes high to disable X-rays. Selecting PULSE MODE causes this line to toggle high and low at an 4 pulse per second rate.

OEC MEDICAL SYSTEMS, INC Training	9600 C-ARM	
	For Reference Only	Page 1 of 1
	XRAYONSS.DS4	12/4/96
	X-RAY ON / DISABLE SIGNAL SHEET	

9600 Mobile Digital C-Arm - Image System Block Diagrams, Test Points, and Waveforms

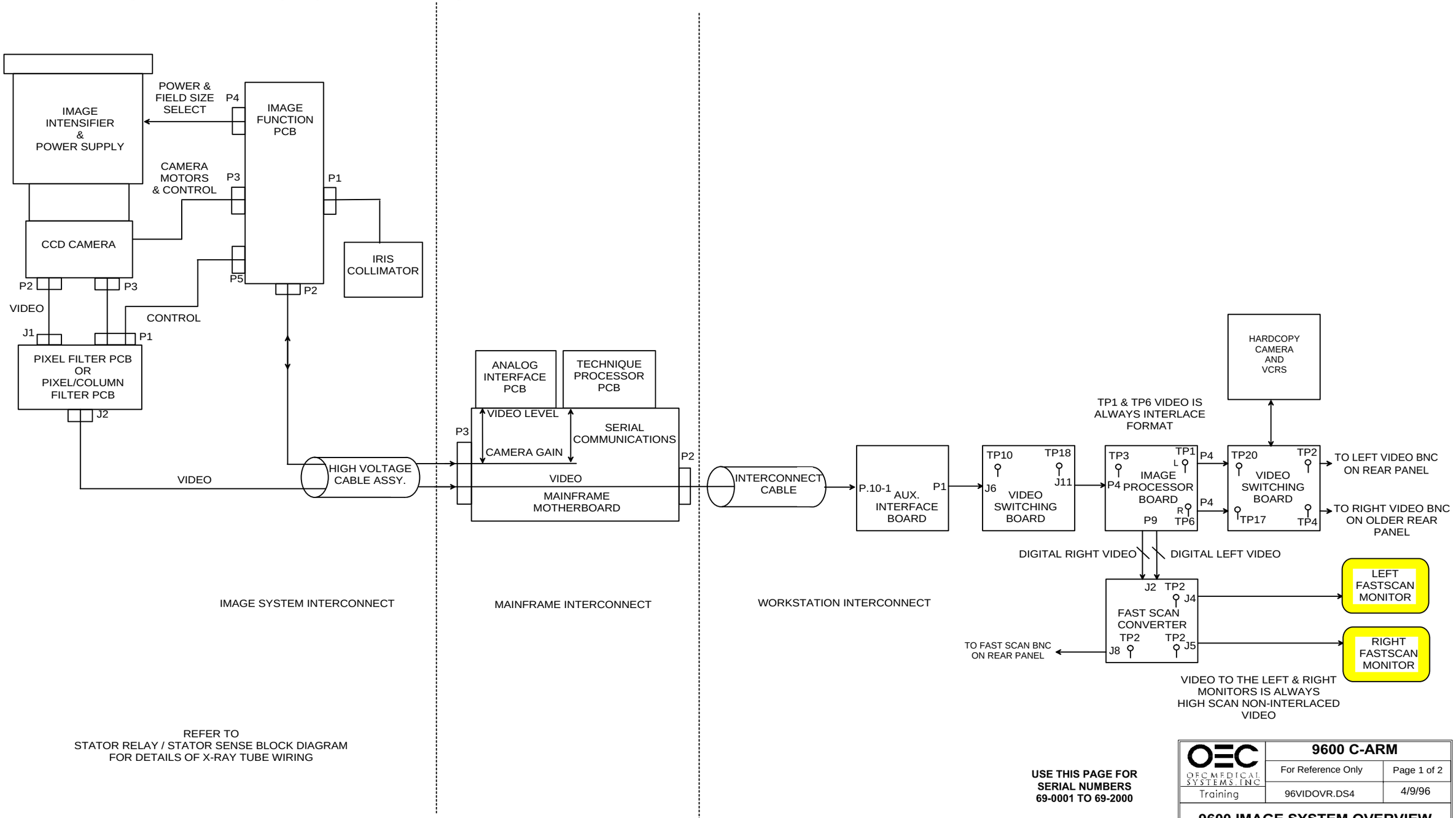

USE THIS PAGE FOR SERIAL NUMBERS 69-0001 TO 69-2000

OEC MEDICAL SYSTEMS, INC Training	9600 C-ARM	
	For Reference Only	Page 1 of 2
	96VIDOVR.DS4	4/9/96
9600 IMAGE SYSTEM OVERVIEW BLOCK DIAGRAM		

9600 Mobile Digital C-Arm - Image System Block Diagrams, Test Points, and Signal Waveforms

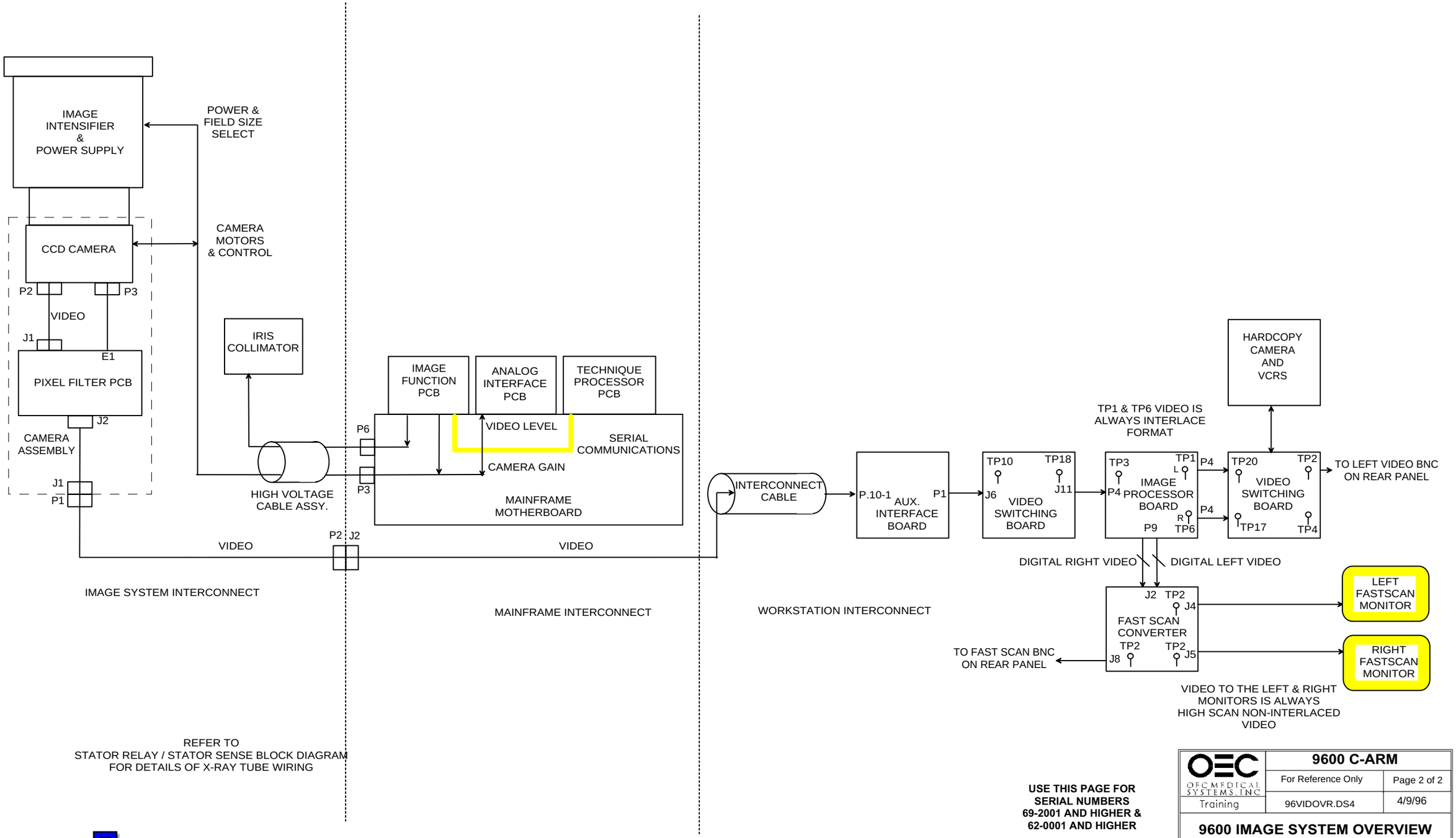

USE THIS PAGE FOR SERIAL NUMBERS 69-2001 AND HIGHER & 62-0001 AND HIGHER

OEC MEDICAL SYSTEMS, INC. Training	9600 C-ARM	
	For Reference Only	Page 2 of 2
	96VIDOVR.DS4	4/9/96
9600 IMAGE SYSTEM OVERVIEW BLOCK DIAGRAM		

9600 Mobile Digital C-Arm - Image System Block Diagrams, Test Points, and Waveforms

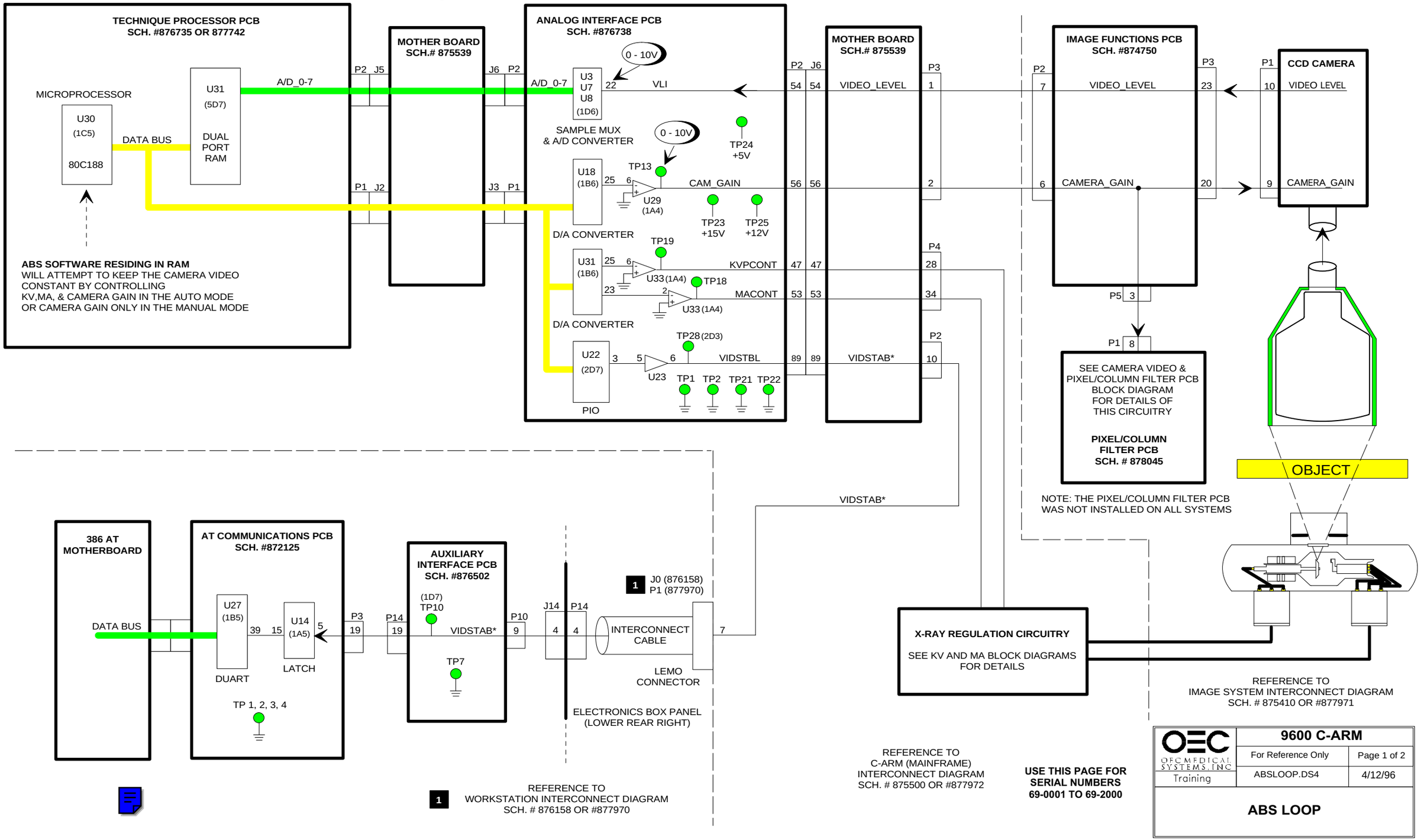

9600 Mobile Digital C-Arm - Image System Block Diagrams, Test Points, and Signal Waveforms

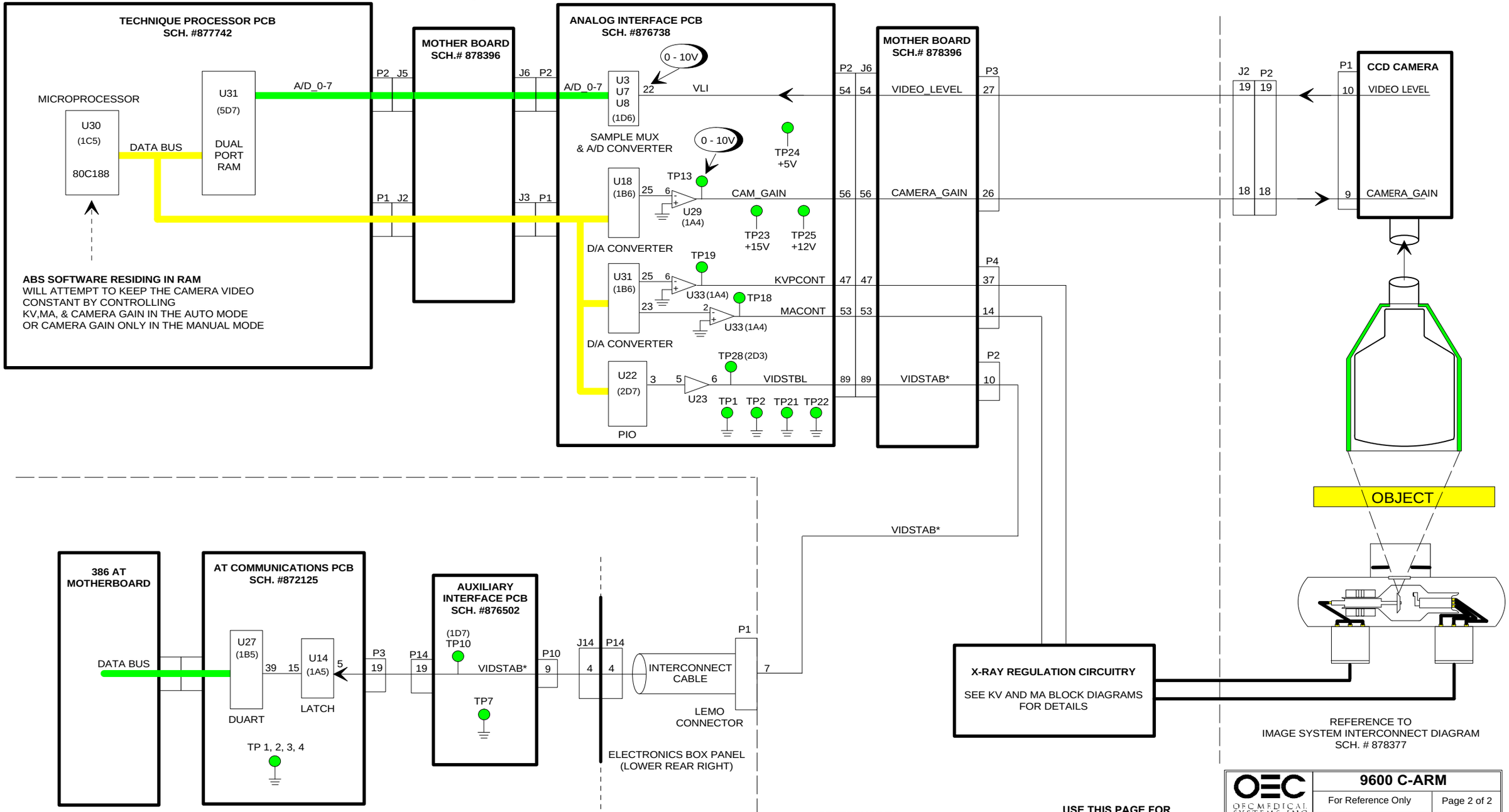

9600 Mobile Digital C-Arm - Image System Block Diagrams, Test Points, and Signal Waveforms

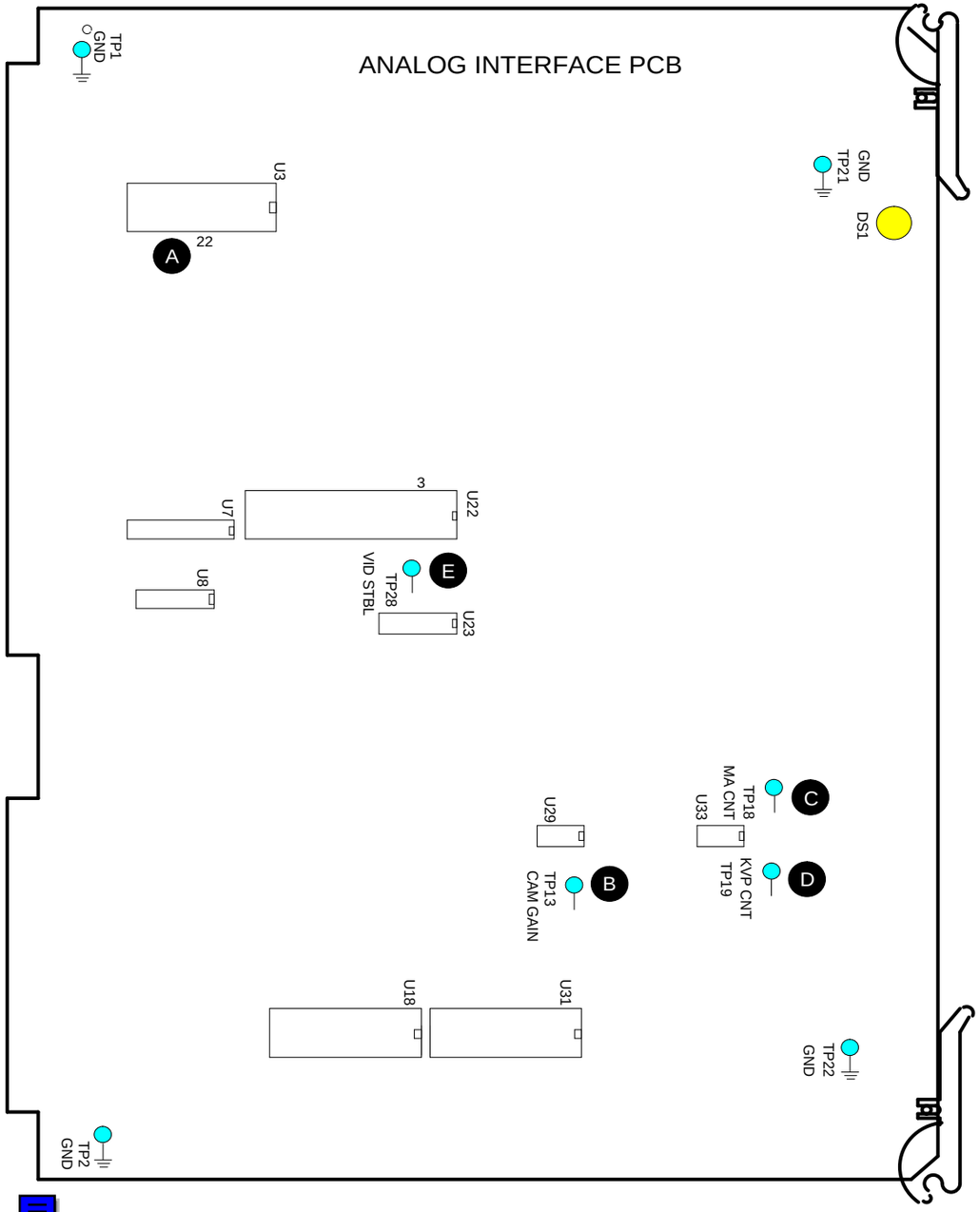

A THE VIDEO LEVEL SIGNAL VARIES FROM 1 VOLT WITH X-RAYS OFF TO 6 VOLTS WITH X-RAYS ON. TYPICAL VIDEO LEVEL VOLTAGE IS 5.75 - 6.0 VOLTS DC DURING X-RAYS.

B THE CAMERA GAIN SIGNAL VARIES FROM 0 TO 6 VOLTS DC AS REQUIRED BY THE ABS SOFTWARE TO GET A VIDEO LEVEL SIGNAL OF APPROX. 6 VOLTS FROM THE CAMERA VIDEO PCB.

C THE MA CONTROL SIGNAL WILL ADJUST UP OR DOWN AS THE ABS SOFTWARE ON THE TECHNIQUE PROCESSOR MAKES ADJUSTMENTS TO ACHIEVE THE PROPER VIDEO LEVEL SIGNAL

D THE KV CONTROL SIGNAL WILL ADJUST UP OR DOWN AS THE ABS SOFTWARE ON THE TECHNIQUE PROCESSOR MAKES ADJUSTMENTS TO ACHIEVE THE PROPER VIDEO LEVEL SIGNAL

E HIGH TO LOW TRANSITION

VIDEO STABLE GOES FROM HIGH TO LOW AFTER THE ABS LOOP HAS BEEN SATISFIED AND THE VIDEO SIGNAL IS STABLE.

GENERATOR | WORKSTATION

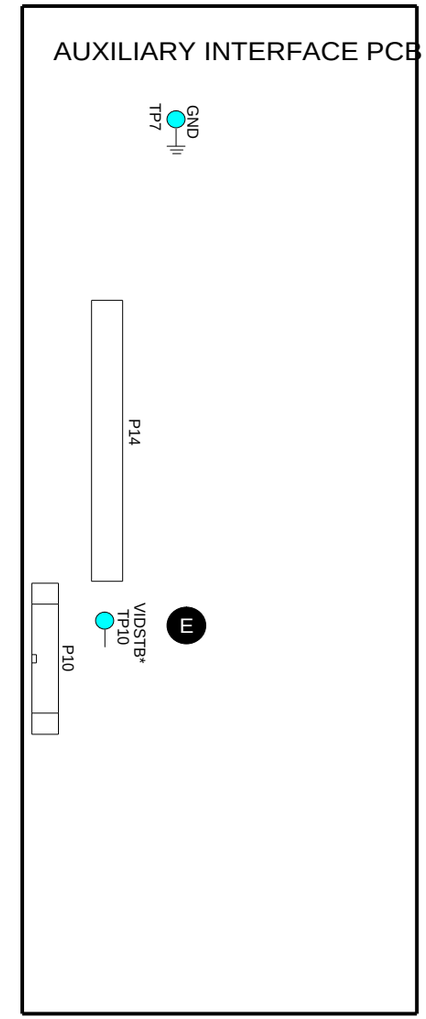

OEC MEDICAL SYSTEMS, INC. Training	9600 C-ARM	
	For Reference Only	Page 1 of 1
	ABSLOPSS.DS4	5/17/96
9600 ABS LOOP SIGNAL SHEET		

9600 Mobile Digital C-Arm - Image System Block Diagrams, Test Points, and Signal Waveforms

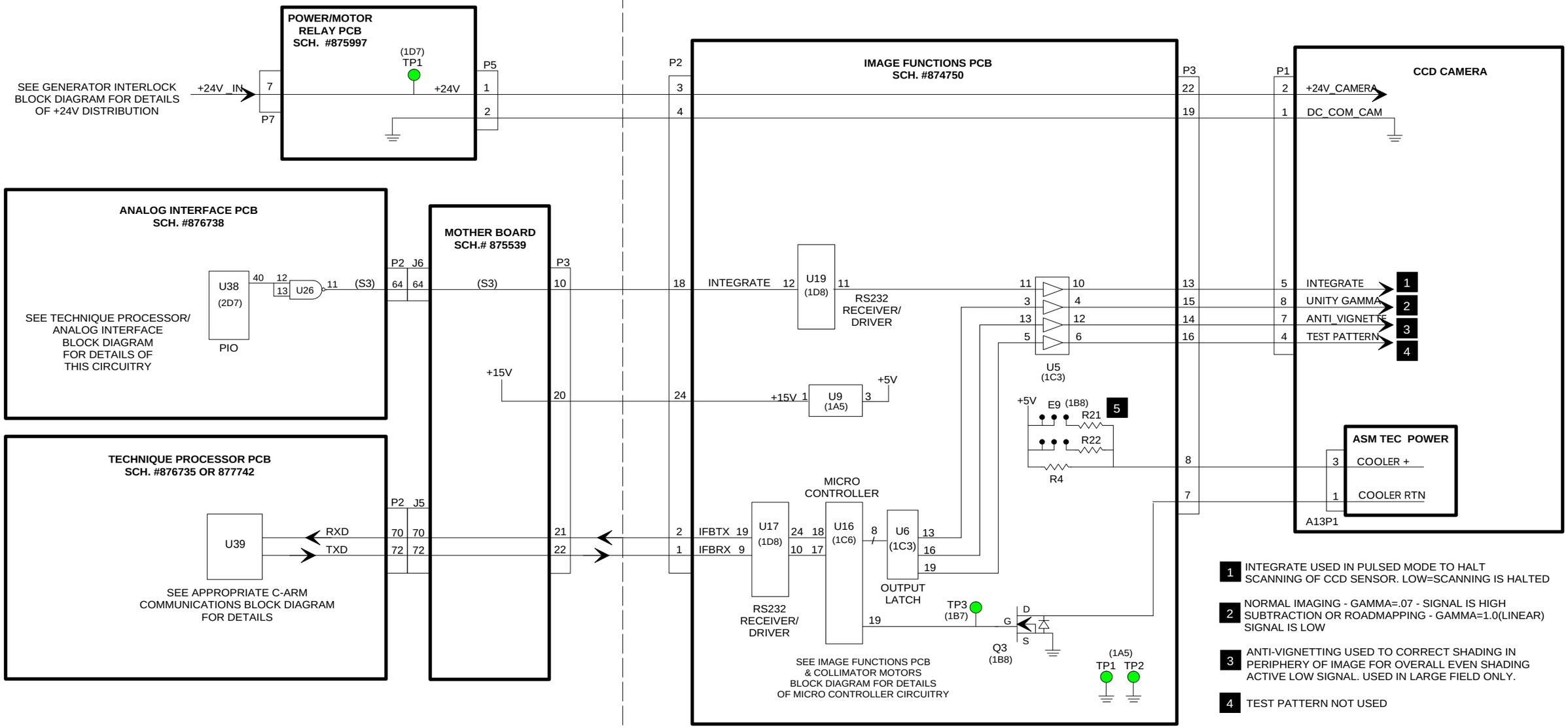

1 INTEGRATE USED IN PULSED MODE TO HALT SCANNING OF CCD SENSOR. LOW=SCANNING IS HALTED

2 NORMAL IMAGING - GAMMA=.07 - SIGNAL IS HIGH SUBTRACTION OR ROADMAPPING - GAMMA=1.0(LINEAR) SIGNAL IS LOW

3 ANTI-VIGNETTING USED TO CORRECT SHADING IN PERIPHERY OF IMAGE FOR OVERALL EVEN SHADING ACTIVE LOW SIGNAL. USED IN LARGE FIELD ONLY.

4 TEST PATTERN NOT USED

5 E9 JUMPERS ARE FOR CURRENT LIMITING THE COOLER +5V. THEY ARE NOT USED AT THIS TIME

REFERENCE TO C-ARM (MAINFRAME) INTERCONNECT DIAGRAM SCH. # 875500 OR #877972

REFERENCE TO IMAGE SYSTEM INTERCONNECT DIAGRAM SCH. # 875410 OR #877971

USE THIS PAGE FOR SERIAL NUMBERS 69-0001 TO 69-2000

OEC OF C MEDICAL SYSTEMS, INC Training	9600 C-ARM	
	For Reference Only	Page 1 of 2
	CAMCNTRS.DS4	6/6/96

CCD CAMERA CONTROLS

9600 Mobile Digital C-Arm - Image System Block Diagrams, Test Points, and Waveforms

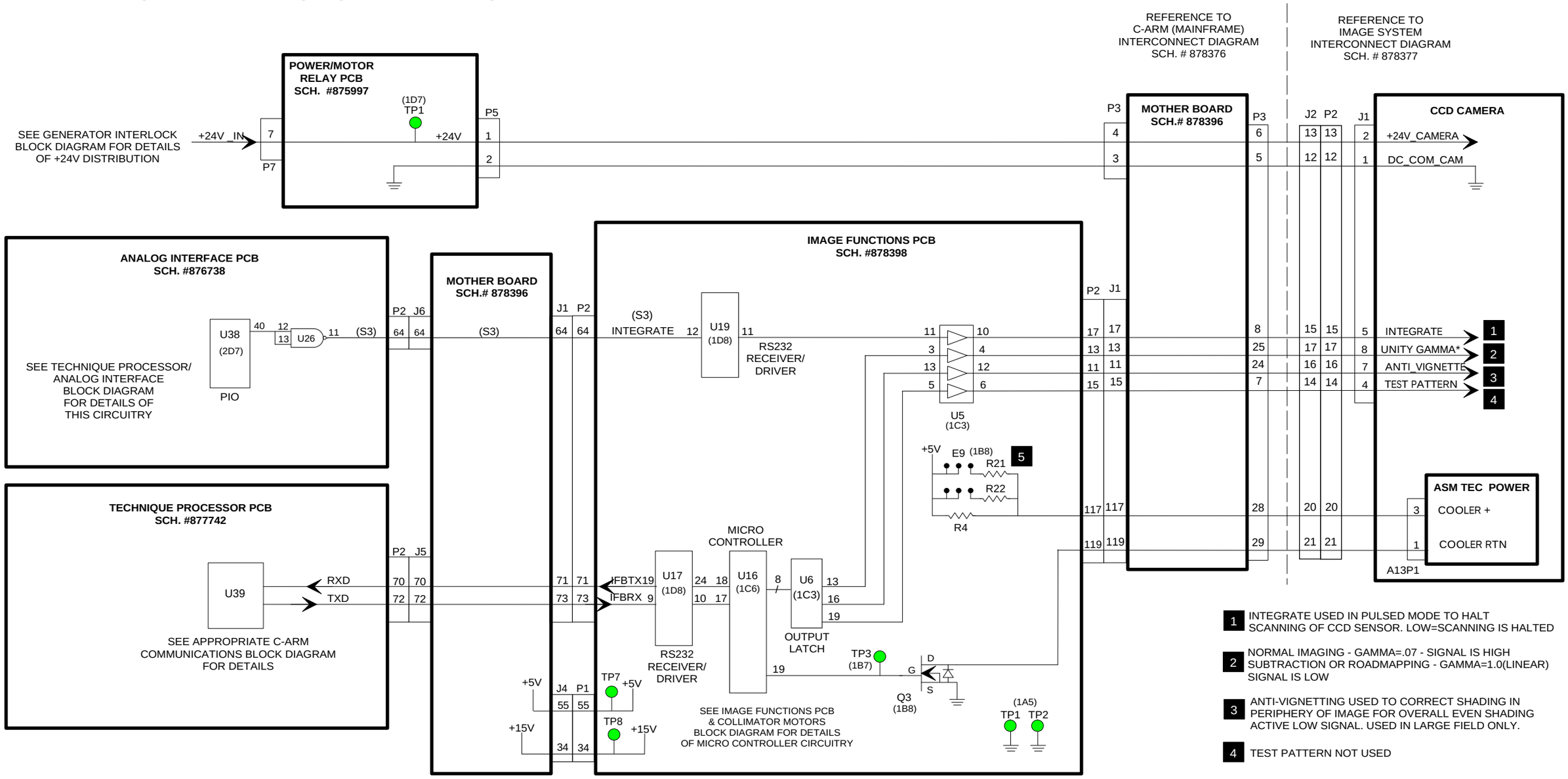

1 INTEGRATE USED IN PULSED MODE TO HALT SCANNING OF CCD SENSOR. LOW=SCANNING IS HALTED

2 NORMAL IMAGING - GAMMA=.07 - SIGNAL IS HIGH SUBTRACTION OR ROADMAPPING - GAMMA=1.0(LINEAR) SIGNAL IS LOW

3 ANTI-VIGNETTING USED TO CORRECT SHADING IN PERIPHERY OF IMAGE FOR OVERALL EVEN SHADING ACTIVE LOW SIGNAL. USED IN LARGE FIELD ONLY.

4 TEST PATTERN NOT USED

5 E9 JUMPERS ARE FOR CURRENT LIMITING THE COOLER +5V. THEY ARE NOT USED AT THIS TIME

USE THIS PAGE FOR SERIAL NUMBERS 69-2001 AND HIGHER & 62-0001 AND HIGHER

OEC MEDICAL SYSTEMS, INC Training	9600 C-ARM	
	For Reference Only	Page 2 of 2
	CAMCNTRS.DS4	6/6/96

CCD CAMERA CONTROLS

9600 Mobile Digital C-Arm - Image System Block Diagrams, Test Points, and Waveforms

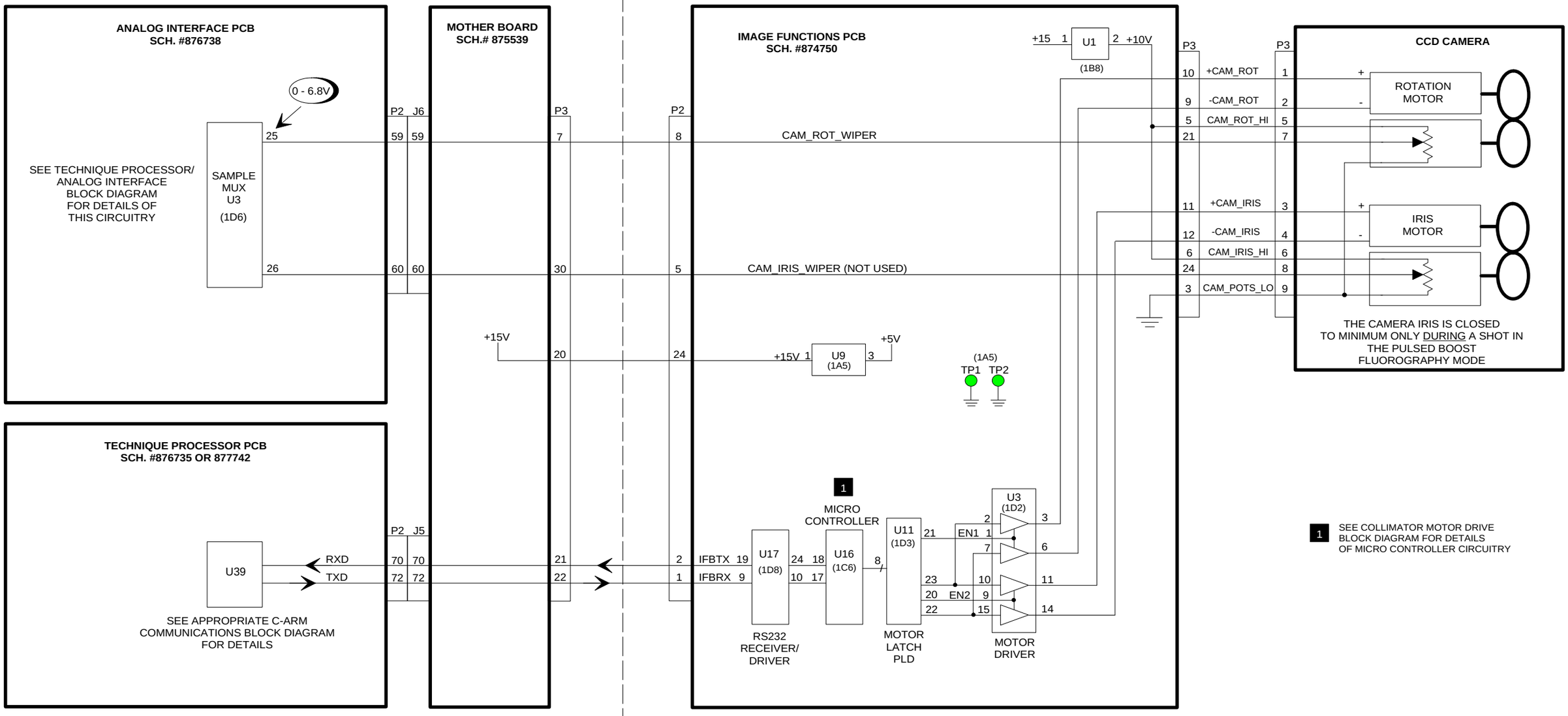

REFERENCE TO C-ARM (MAINFRAME) INTERCONNECT DIAGRAM SCH. # 875500 OR #877972

REFERENCE TO IMAGE SYSTEM INTERCONNECT DIAGRAM SCH. # 875410 OR #877971

USE THIS PAGE FOR SERIAL NUMBERS 69-0001 TO 69-2000

OEC MEDICAL SYSTEMS, INC Training	9600 C-ARM	
	For Reference Only	Page 1 of 2
	CAMMTRS.DS4	6/6/96

CCD CAMERA MOTOR DRIVE IRIS / ROTATION MOTORS

9600 Mobile Digital C-Arm - Image System Block Diagrams, Test Points, and Signal Waveforms

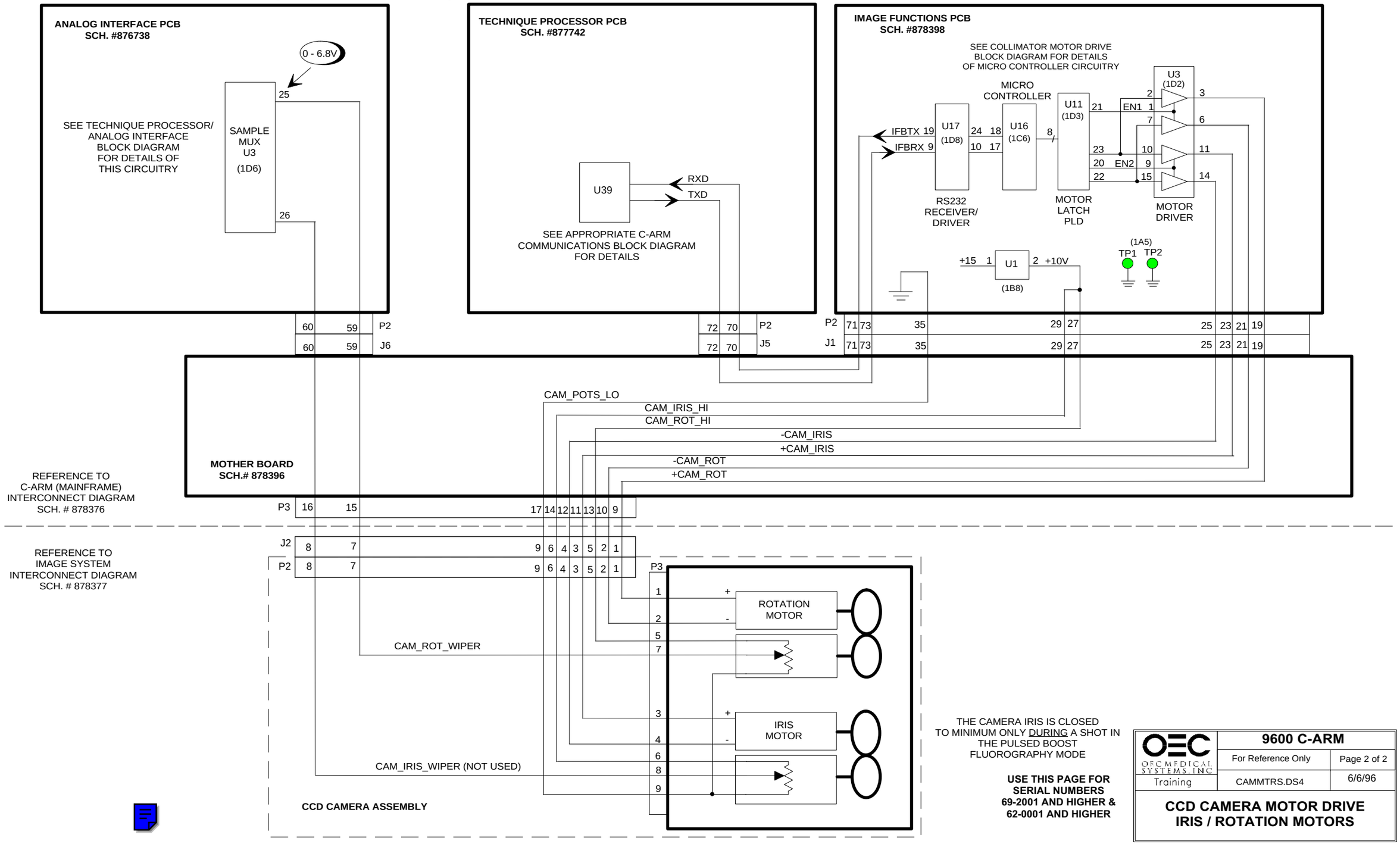

THE CAMERA IRIS IS CLOSED TO MINIMUM ONLY DURING A SHOT IN THE PULSED BOOST FLUOROGRAPHY MODE

USE THIS PAGE FOR SERIAL NUMBERS 69-2001 AND HIGHER & 62-0001 AND HIGHER

OEC MEDICAL SYSTEMS, INC	9600 C-ARM	
	For Reference Only	Page 2 of 2
Training	CAMMTRS.DS4	6/6/96

CCD CAMERA MOTOR DRIVE IRIS / ROTATION MOTORS

9600 Mobile Digital C-Arm - Image System Block Diagrams, Test Points, and Waveforms

1. DS2, WHEN ILLUMINATED, INDICATES THAT THE COLLIMATOR IRIS DID NOT GO TO THE EXPECTED SIZE FOR THE MAG MODE SELECTED
2. DS1 BLINKS ON AND OFF AS A VISUAL INDICATION THAT THE MICROCONTROLLER IS RUNNING
3. E5 JUMPER INSTALLED ONLY DURING COLLIMATOR IRIS SIZE CALIBRATION. WITH E5 INSTALLED THE IRIS POTENIOMETER VALUES ARE WRITTEN TO THE EEPROM U7 FOR EACH MAG MODE.

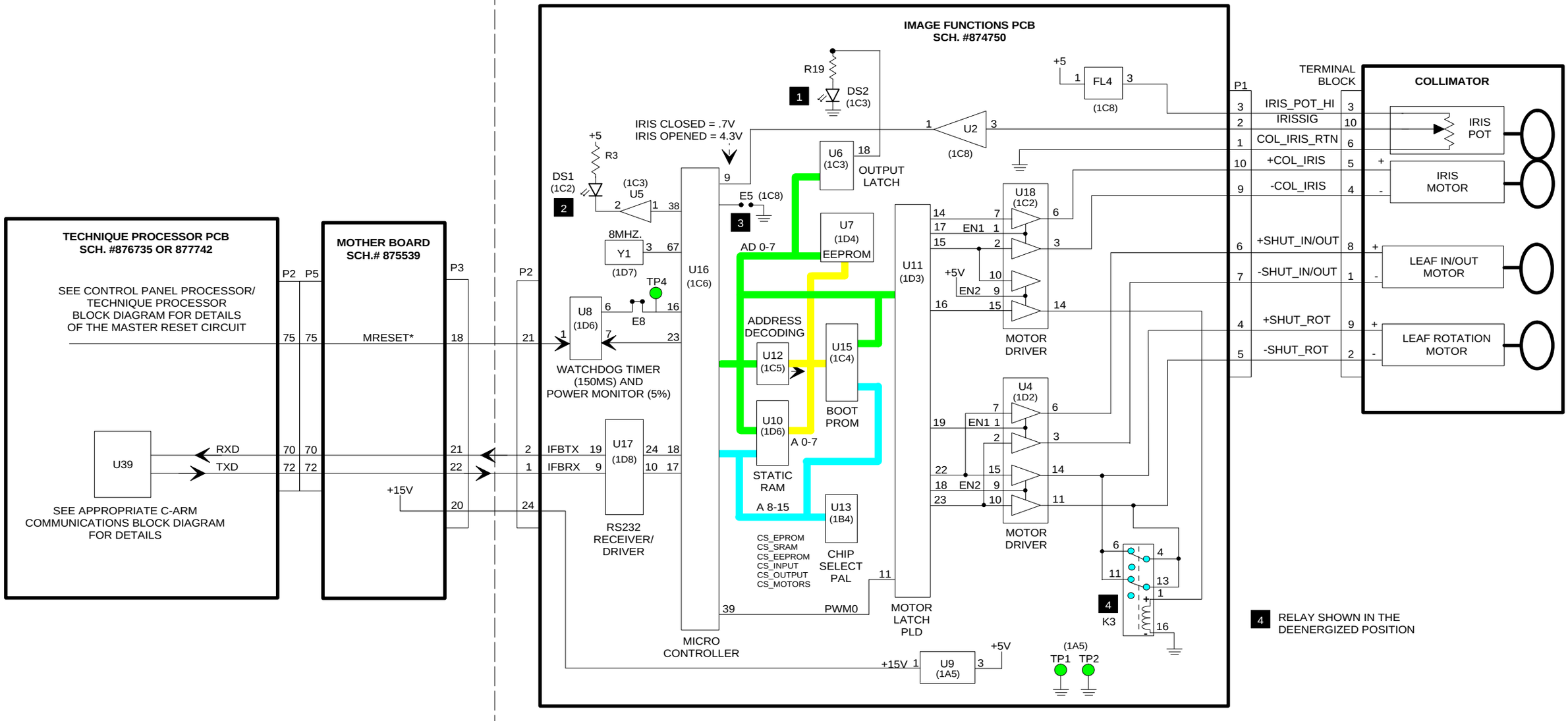

4. RELAY SHOWN IN THE DEENERGIZED POSITION

REFERENCE TO C-ARM (MAINFRAME) INTERCONNECT DIAGRAM SCH. # 875500 OR #877972

REFERENCE TO IMAGE SYSTEM INTERCONNECT DIAGRAM SCH. # 875410 OR #877971

USE THIS PAGE FOR SERIAL NUMBERS 69-0001 TO 69-2000

OEC MEDICAL SYSTEMS, INC. Training	9600 C-ARM	
	For Reference Only	Page 1 of 2
	COLLMTRS.DS4	6/6/96

COLLIMATOR MOTOR DRIVE IRIS / LEAF MOTORS

9600 Mobile Digital C-Arm - Image System Block Diagrams, Test Points, and Signal Waveforms

1 DS2, WHEN ILLUMINATED, INDICATES THAT THE COLLIMATOR IRIS DID NOT GO TO THE EXPECTED SIZE FOR THE MAG MODE SELECTED

2 DS1 BLINKS ON AND OFF AS A VISUAL INDICATION THAT THE MICROCONTROLLER IS RUNNING

3 E5 JUMPER INSTALLED ONLY DURING COLLIMATOR IRIS SIZE CALIBRATION. WITH E5 INSTALLED THE IRIS POTENIOMETER VALUES ARE WRITTEN TO THE EEPROM U7 FOR EACH MAG MODE.

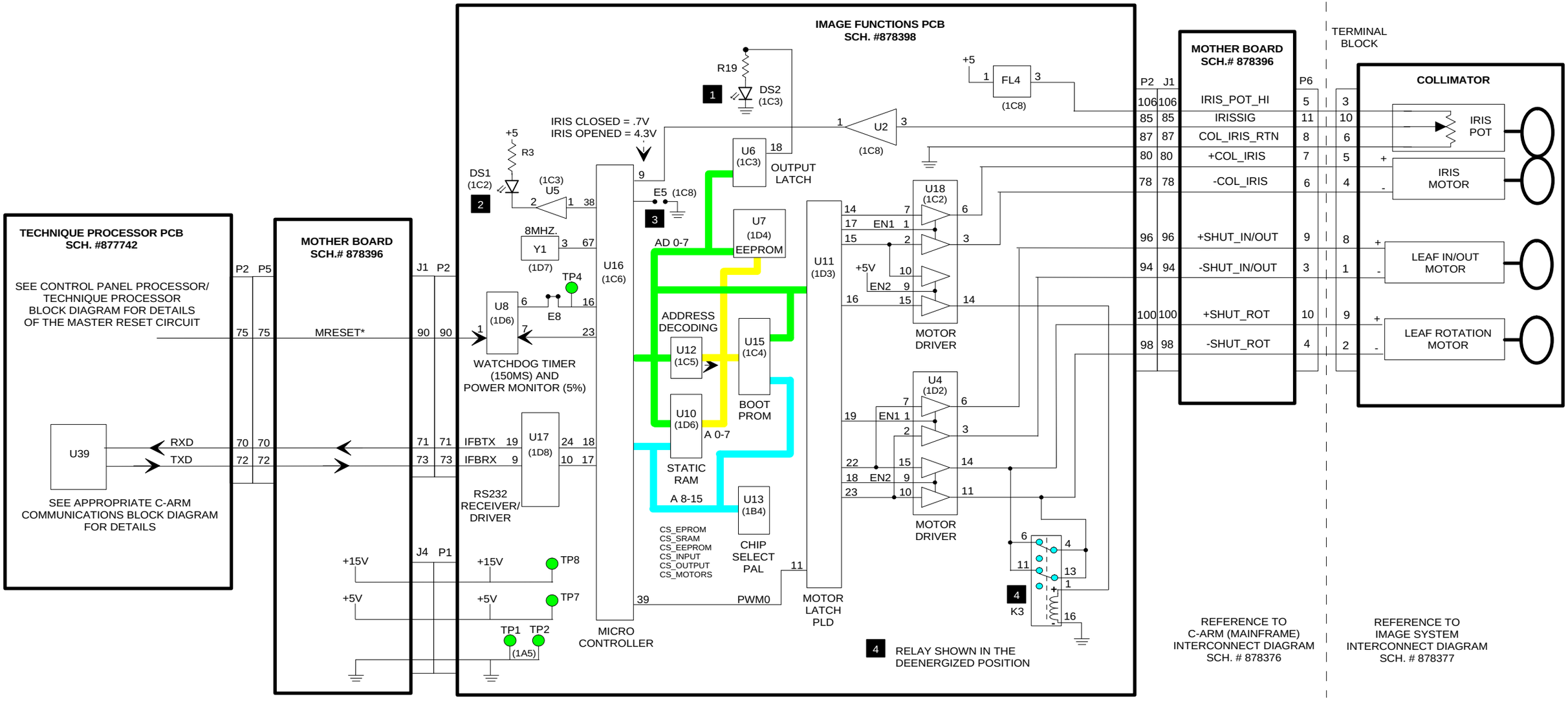

USE THIS PAGE FOR SERIAL NUMBERS 69-2001 AND HIGHER & 62-0001 AND HIGHER

OEC MEDICAL SYSTEMS, INC. Training	9600 C-ARM	
	For Reference Only	Page 2 of 2
	COLLMTRS.DS4	6/6/96

COLLIMATOR MOTOR DRIVE IRIS / LEAF MOTORS

9600 Mobile Digital C-Arm - Image System Block Diagrams, Test Points, and Waveforms

COLLIMATOR IRIS MOTOR - OPEN

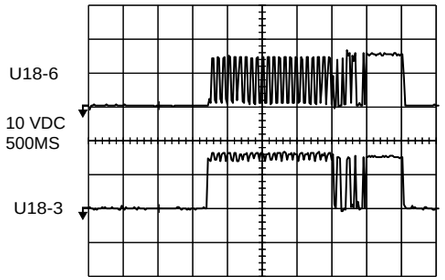

COLLIMATOR IRIS MOTOR - CLOSE

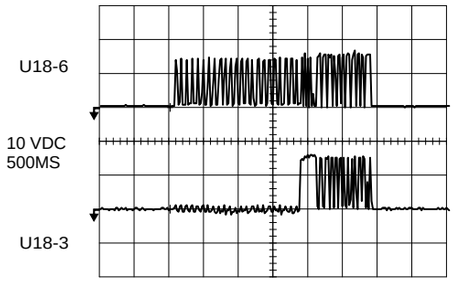

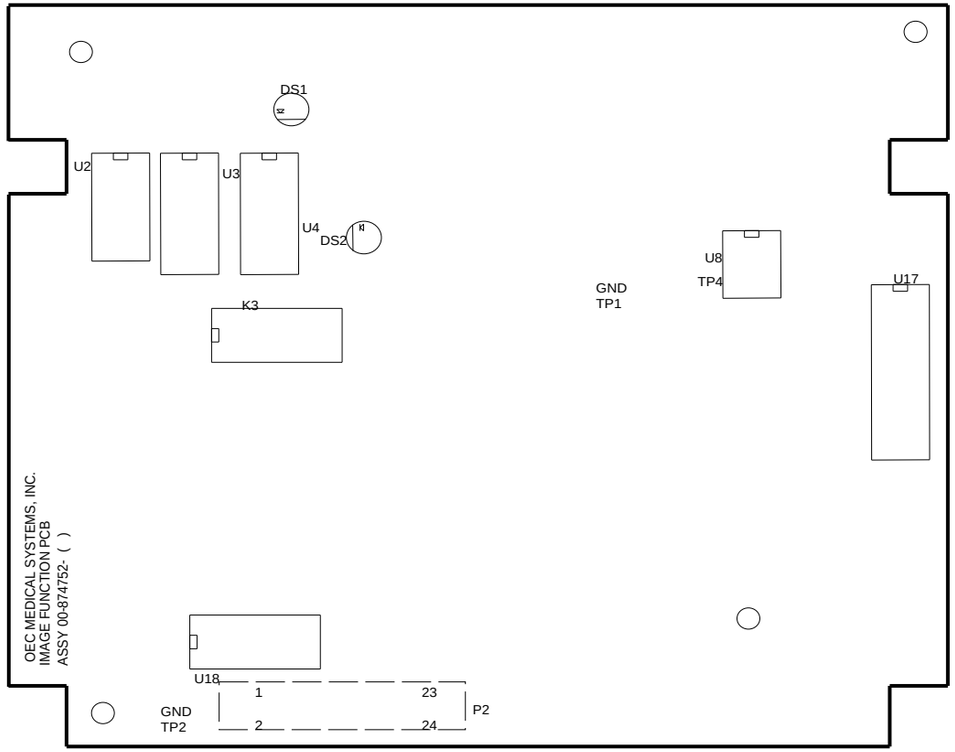

CAMERA ROTATION MOTOR CW

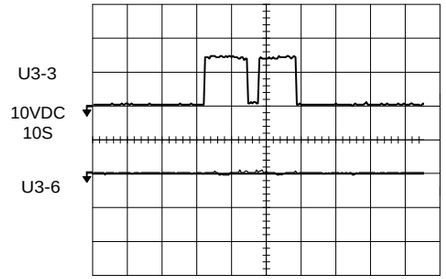

CAMERA ROTATION MOTOR CCW

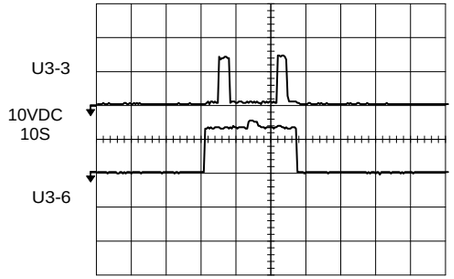

CAMERA IRIS MOTOR

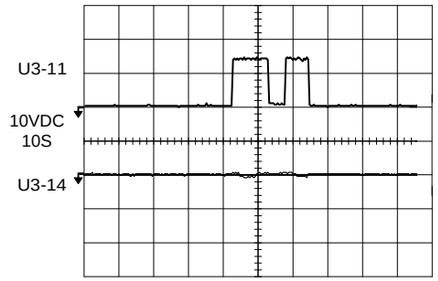

LEAF MOTOR - OUT

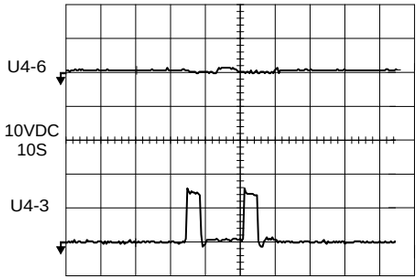

COLLIMATOR IRIS POTENIOMETER WIPER
U2-1 OR U16-9

OPENED	3.45VDC
CLOSED	.83 VDC

LEAF ROTATION MOTOR-DYNAMIC BRAKING CONTROL

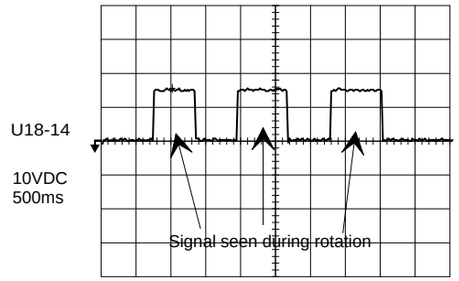

LEAF ROTATION MOTOR - CW

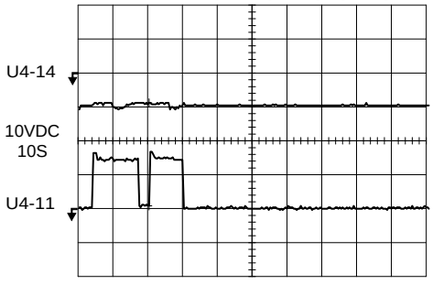

CAMERA ROTATION POTENIOMETER WIPER
P3-21, P2-8, OR ANALOG INTERFACE PCB U3-25

FULLY CW	0 VDC
FULLY CCW	6.56 VDC

LEAF MOTOR - IN

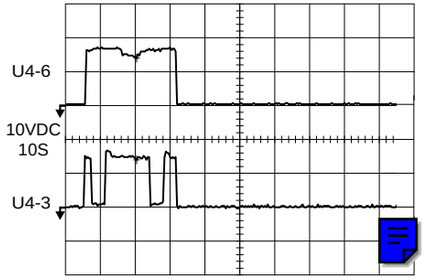

SERIAL
COMMUNICATIONS
FROM
TECHNIQUE PROCESSOR

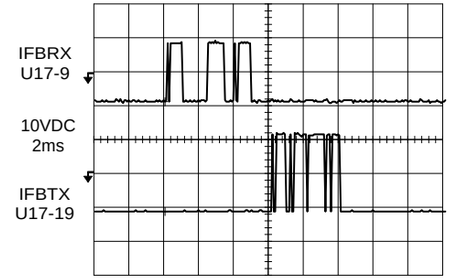

LEAF ROTATION MOTOR - CCW

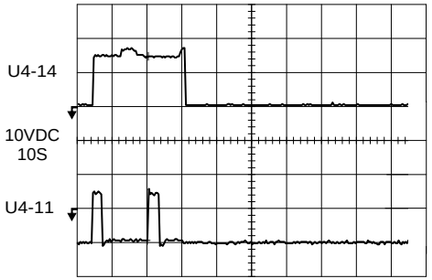

USE THIS PAGE FOR SERIAL NUMBERS 69-0001 TO 69-2000

OEC MEDICAL SYSTEMS, INC. Training	**9600 C-ARM**	
	For Reference Only	Page 1 of 4
	COLCAMSS.DS4	7/9/96
COLLIMATOR & CAMERA SIGNAL SHEETS		
COLLIMATOR & CAMERA MOTORS		

9600 Mobile Digital C-Arm - Image System Block Diagrams, Test Points, and Waveforms

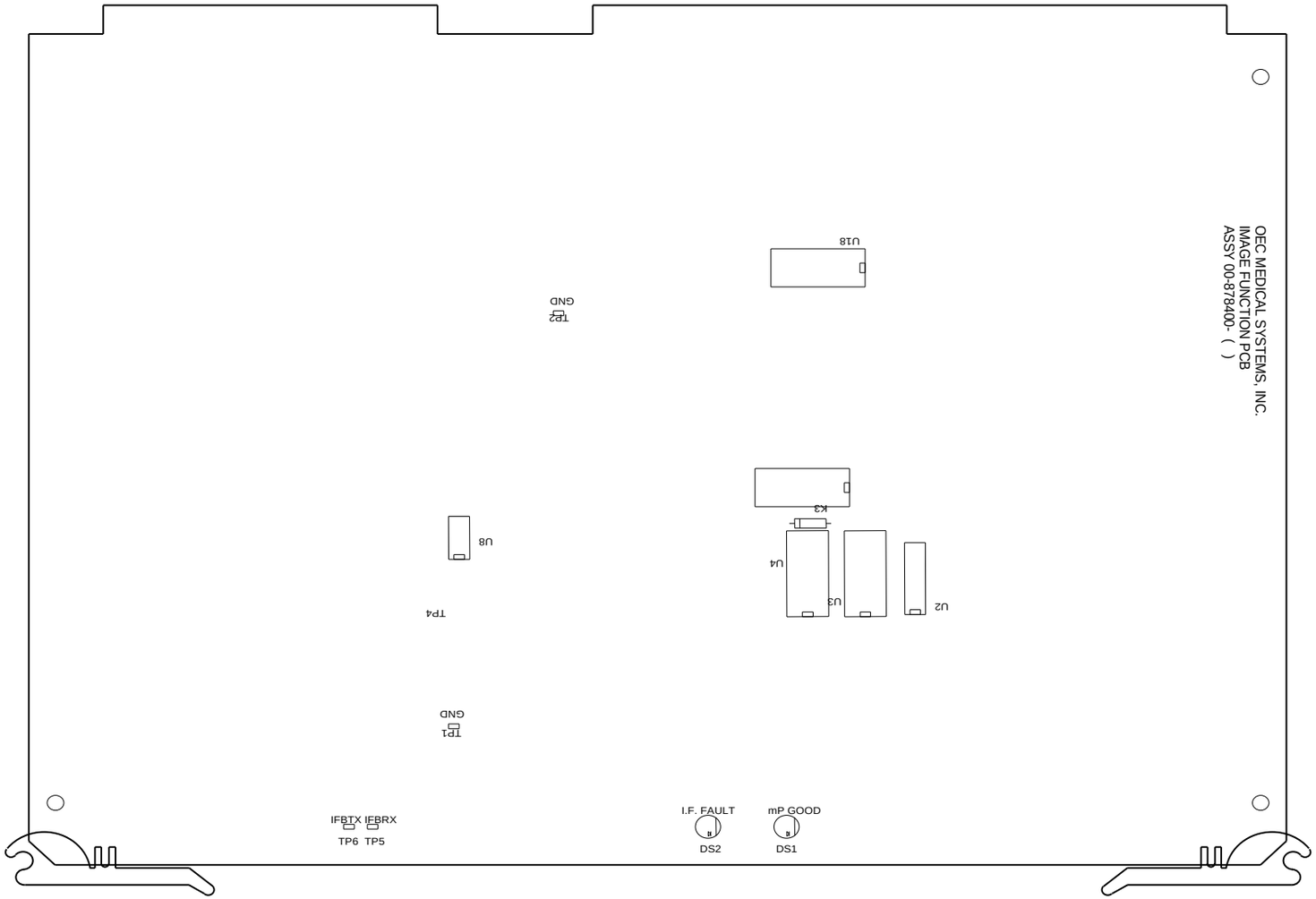

CAMERA ROTATION MOTOR CW

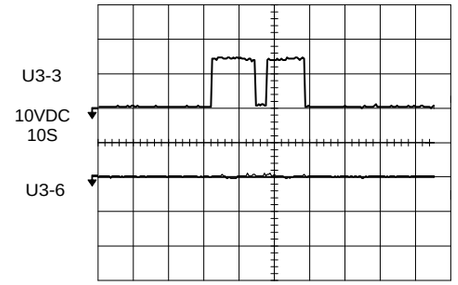

CAMERA ROTATION MOTOR CCW

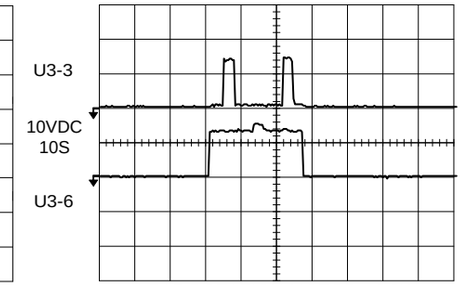

LEAF ROTATION MOTOR - CW

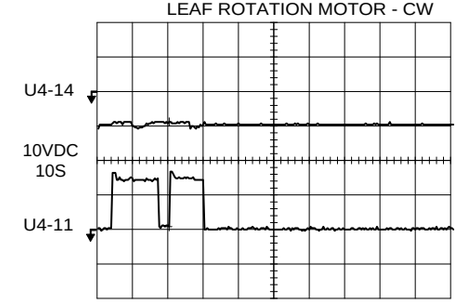

LEAF ROTATION MOTOR - CCW

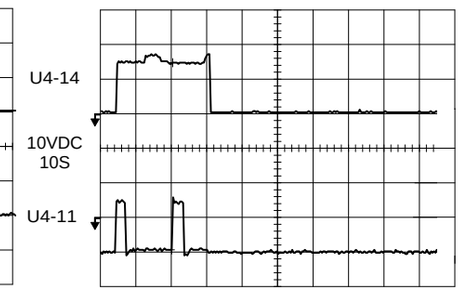

LEAF ROTATION MOTOR-DYNAMIC BRAKING CONTROL

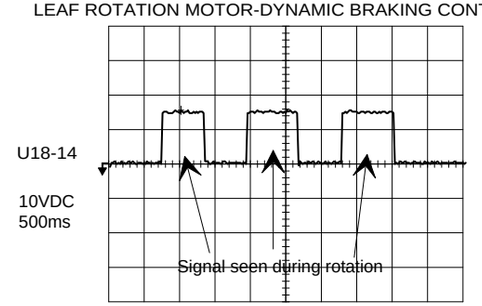

CAMERA IRIS MOTOR

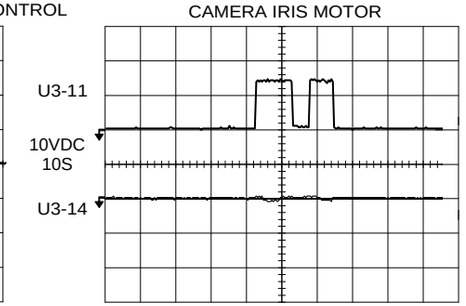

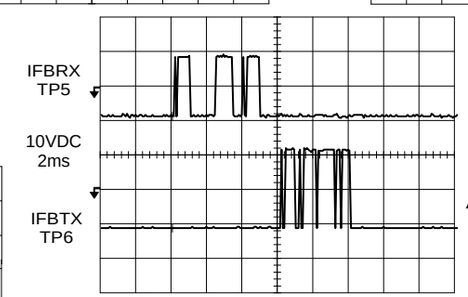

SERIAL COMMUNICATIONS FROM TECHNIQUE PROCESSOR

COLLIMATOR IRIS POTENIOMETER WIPER U2-1

OPENED	3.45 VDC
CLOSED	.83VDC

CAMERA ROTATION POTENIOMETER WIPER ANALOG INTERFACE PCB U3-25

FULLY CW	0VDC
FULLY CCW	6.56VDC

COLLIMATOR IRIS MOTOR - OPEN

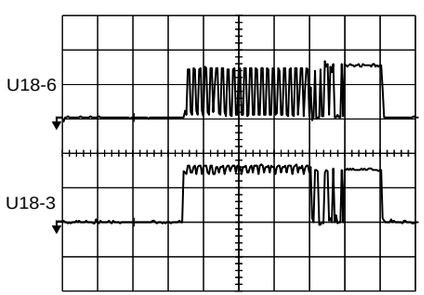

10 VDC
500MS

COLLIMATOR IRIS MOTOR - CLOSE

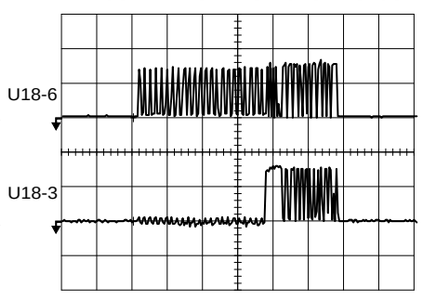

10 VDC
500MS

LEAF MOTOR - OUT

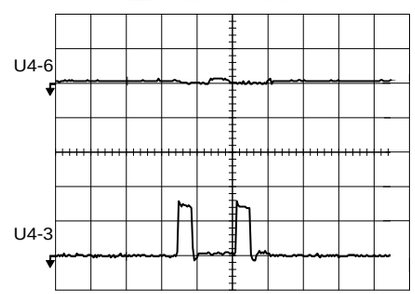

10VDC
10S

LEAF MOTOR - IN

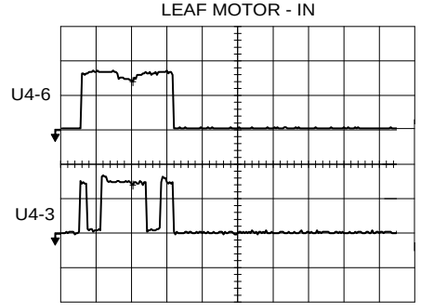

10VDC
10S

USE THIS PAGE FOR SERIAL NUMBERS 69-2001 AND HIGHER & 62-0001 AND HIGHER

OEC MEDICAL SYSTEMS, INC. Training	**9600 C-ARM**	
	For Reference Only	Page 2 of 4
	COLCAMSS.DS4	7/9/96

COLLIMATOR & CAMERA SIGNAL SHEETS

COLLIMATOR & CAMERA MOTORS

9600 Mobile Digital C-Arm - Image System Block Diagrams, Test Points, and Waveforms

UNITY GAMMA
IFB P3-15, U5-4 OR CAMERA J1-8
HI (+5V WHEN NOT IN SUBTRACTION OR ROAD MAP)
LO (0V WHEN IN SUBTRACTION OF ROAD MAP)

INTEGRATE
IFB P3-13, U5-10 OR CAMERA J1-5
PULSE MODE OR PULSE BOOST MODE →
ALL OTHER MODES, +5V

TEST PATTERN (NOT USED) IFB P3-16, U5-6 OR CAMERA J1-4
HI WHEN NOT ENABLED
LO CAUSES TEST PATTERN 5 1/2" X 5 1/2"
REFER TO FSB #94-025

ANTI VIGNETTE
IFB P3-14, U5-12 OR CAMERA J1-7
NORMAL MODE - LOW
MAG 1 - HI
MAG 2 - HI

CAMERA VIDEO SIGNAL - NO X-RAYS

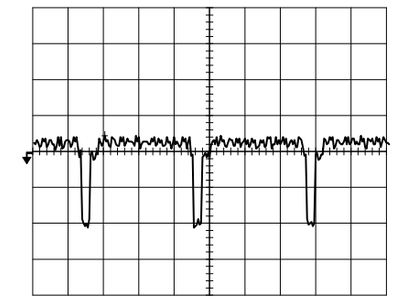

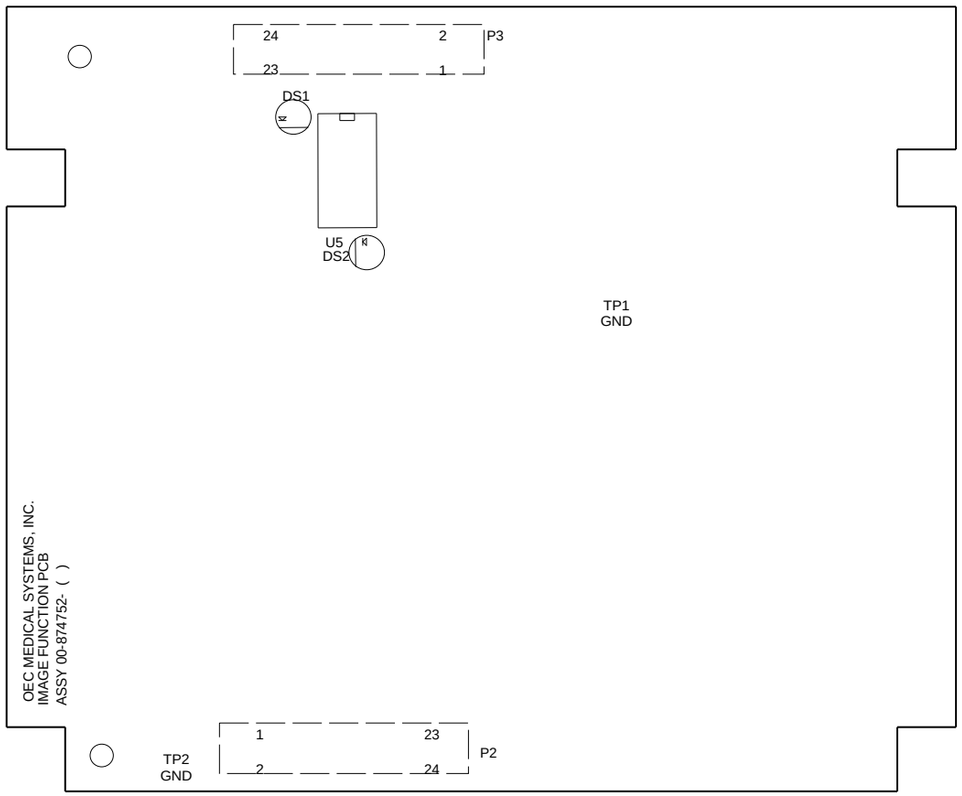

CAMERA GAIN
IFB P3-20 OR CAMERA J1-9
MIN. 0V
MAX. +9V

VIDEO LEVEL INDICATOR
IFB P3-23 OR CAMERA J1-10
MIN. 0V
MAX. 9.5V
AUTO MODE +4.5V - FLAT FIELD
AUTOMODE +4.5V - MESH TOOL

CAMERA VIDEO SIGNAL
CENTER PIN OF CAMERA J2

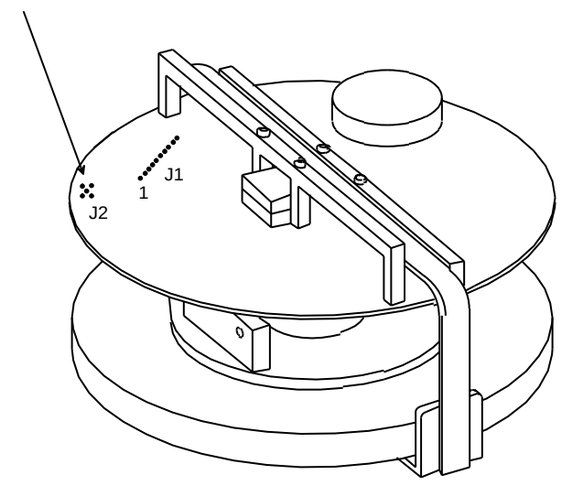

+24V
IFB P2-3, OR CAMERA J1-2

IF FAULT
IFB P2-11, U5-8
DS2 OFF - 0V WHEN NOT FAULT
DS2 ON - +5V WHEN FAULT IS INDICATED

USE THIS PAGE FOR SERIAL NUMBERS 69-0001 TO 69-2000

OEC MEDICAL SYSTEMS, INC. Training	9600 C-ARM	
	For Reference Only	Page 3 of 4
	COLCAMSS.DS4	7/9/96
COLLIMATOR & CAMERA SIGNAL SHEETS CAMERA CONTROLS		

9600 Mobile Digital C-Arm - Image System Block Diagrams, Test Points, and Signal Waveforms

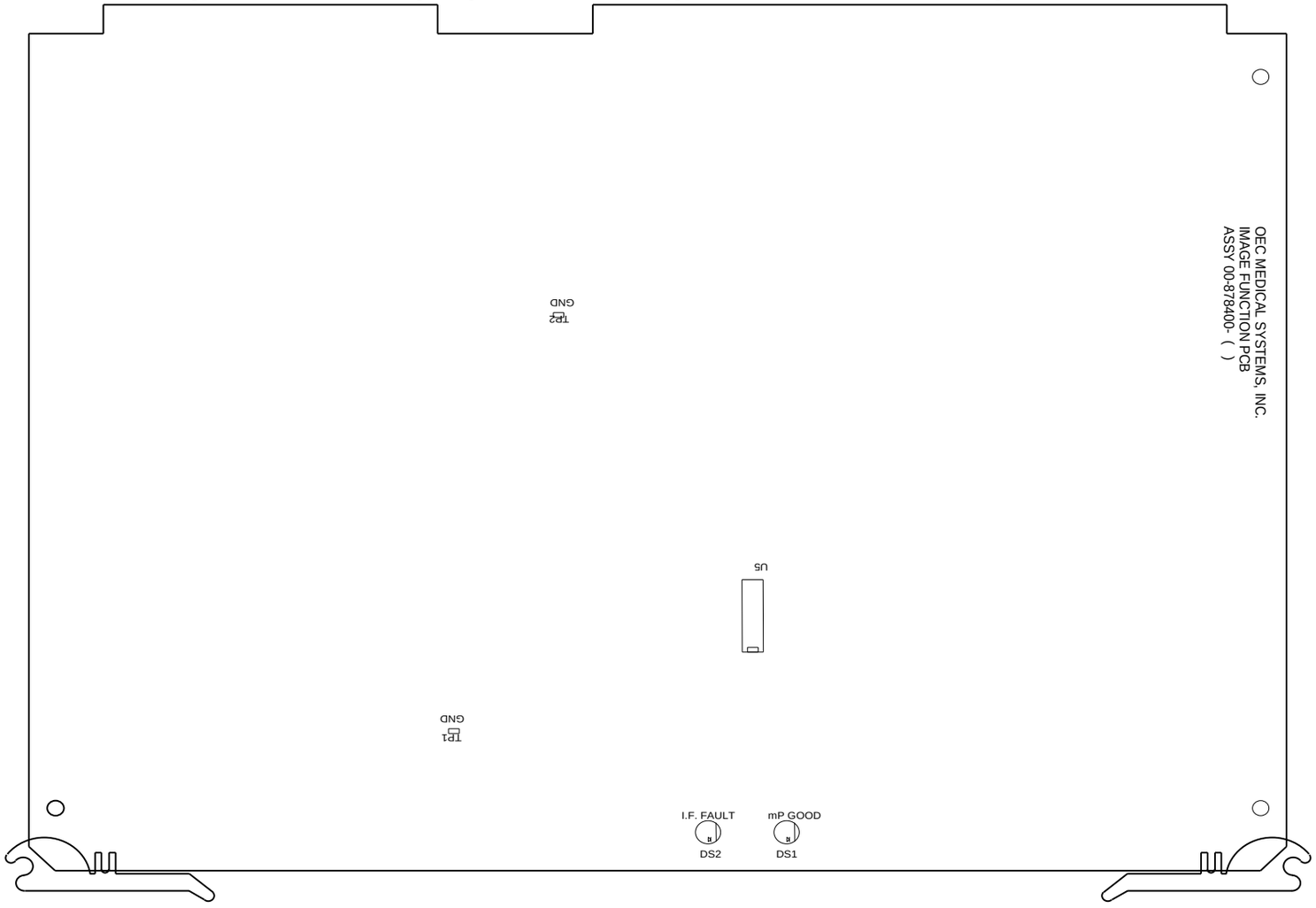

CAMERA VIDEO SIGNAL - NO X-RAYS

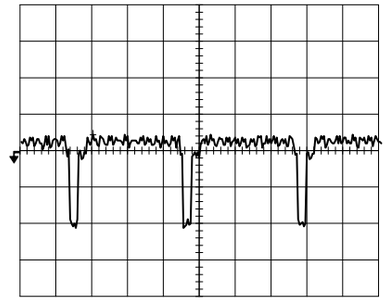

+24V
CAMERA J1-2

CAMERA VIDEO SIGNAL
CENTER PIN OF CAMERA J2

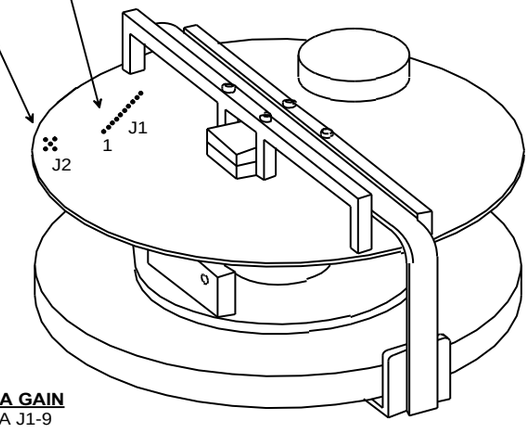

CAMERA GAIN
CAMERA J1-9
MIN. 0V
MAX. +9V

VIDEO LEVEL INDICATOR
CAMERA J1-10
MIN. 0V
MAX. 9.5V
AUTO MODE +4.5V - FLAT FIELD
AUTOMODE +4.5V - MESH TOOL

UNITY GAMMA
IFB U5-4 OR CAMERA J1-8
HI (+5V WHEN NOT IN SUBTRACTION OR ROAD MAP)
LO (0V WHEN IN SUBTRACTION OF ROAD MAP)

IF FAULT
IFB U5-8
DS2 OFF - 0V WHEN NOT FAULT
DS2 ON - +5V WHEN FAULT IS INDICATED

ANTI VIGNETTE
IFB U5-12 OR CAMERA J1-7
NORMAL MODE - LOW
MAG 1 - HI
MAG 2 - HI

TEST PATTERN (NOT USED) IFB U5-6 OR CAMERA J1-4
HI WHEN NOT ENABLED
LO CAUSES TEST PATTERN 5 1/2" X 5 1/2"
REFER TO FSB #94-025

INTEGRATE
IFB U5-10 OR CAMERA J1-5
PULSE MODE OR PULSE BOOST MODE →
ALL OTHER MODES, +5V

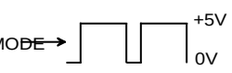

USE THIS PAGE FOR SERIAL NUMBERS 69-2001 AND HIGHER & 62-0001 AND HIGHER

OEC MEDICAL SYSTEMS, INC. Training	9600 C-ARM	
	For Reference Only	Page 4 of 4
	COLCAMSS.DS4	7/9/96
COLLIMATOR & CAMERA SIGNAL SHEETS CAMERA CONTROLS		

9600 Mobile Digital C-Arm - Image System Block Diagrams, Test Points, and Waveforms

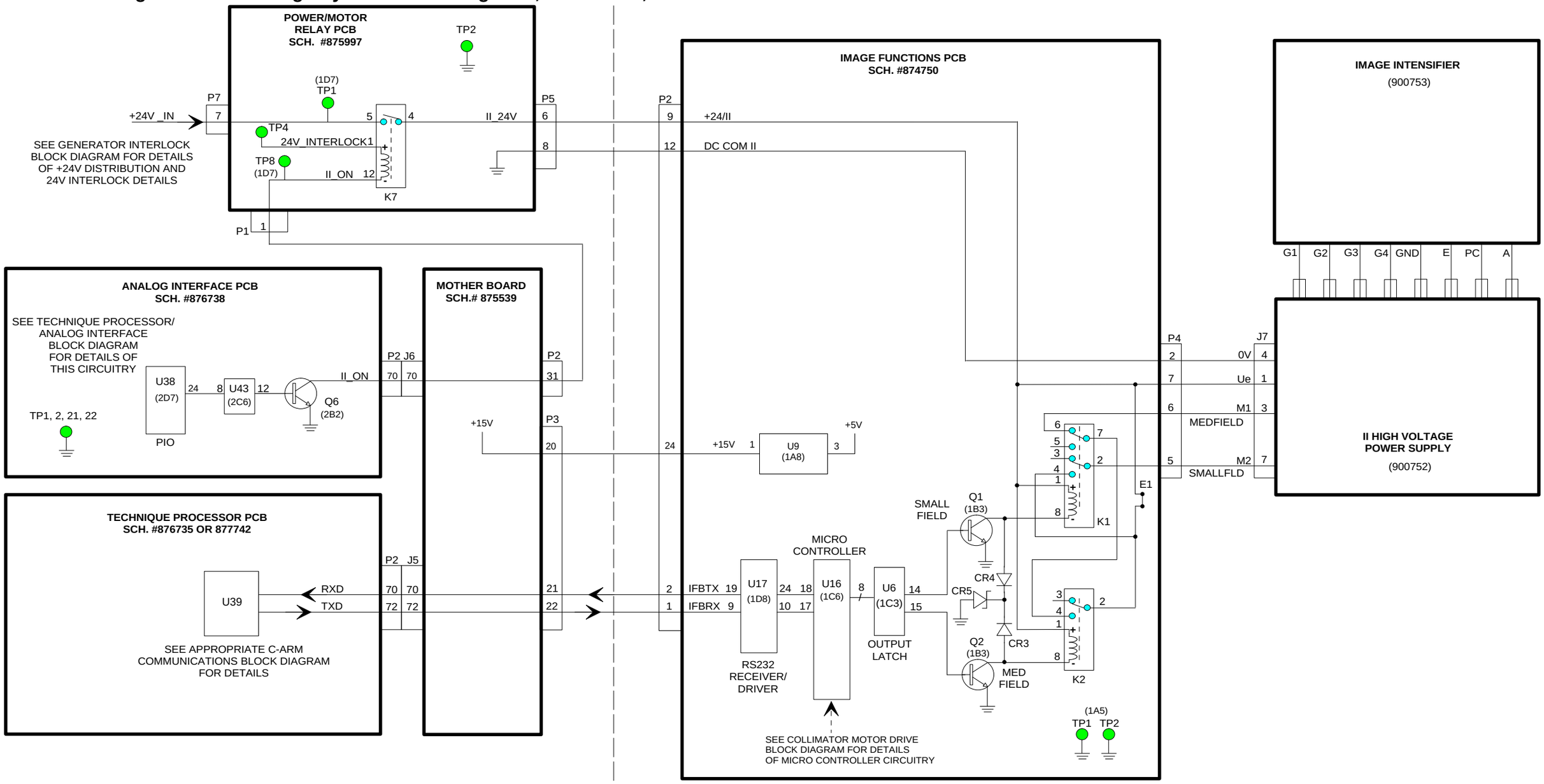

REFERENCE TO C-ARM (MAINFRAME) INTERCONNECT DIAGRAM SCH. # 875500 OR #877972

REFERENCE TO IMAGE SYSTEM INTERCONNECT DIAGRAM SCH. # 875410 OR #877971

USE THIS PAGE FOR SERIAL NUMBERS 69-0001 TO 69-2000

OEC MEDICAL SYSTEMS, INC Training	9600 C-ARM	
	For Reference Only	Page 1 of 2
	IICNTRLS.DS4	9/19/96

IMAGE INTENSIFIER CONTROLS FUNCTIONAL SCHEMATIC

9600 Mobile Digital C-Arm - Image System Block Diagrams, Test Points, and Signal Waveforms

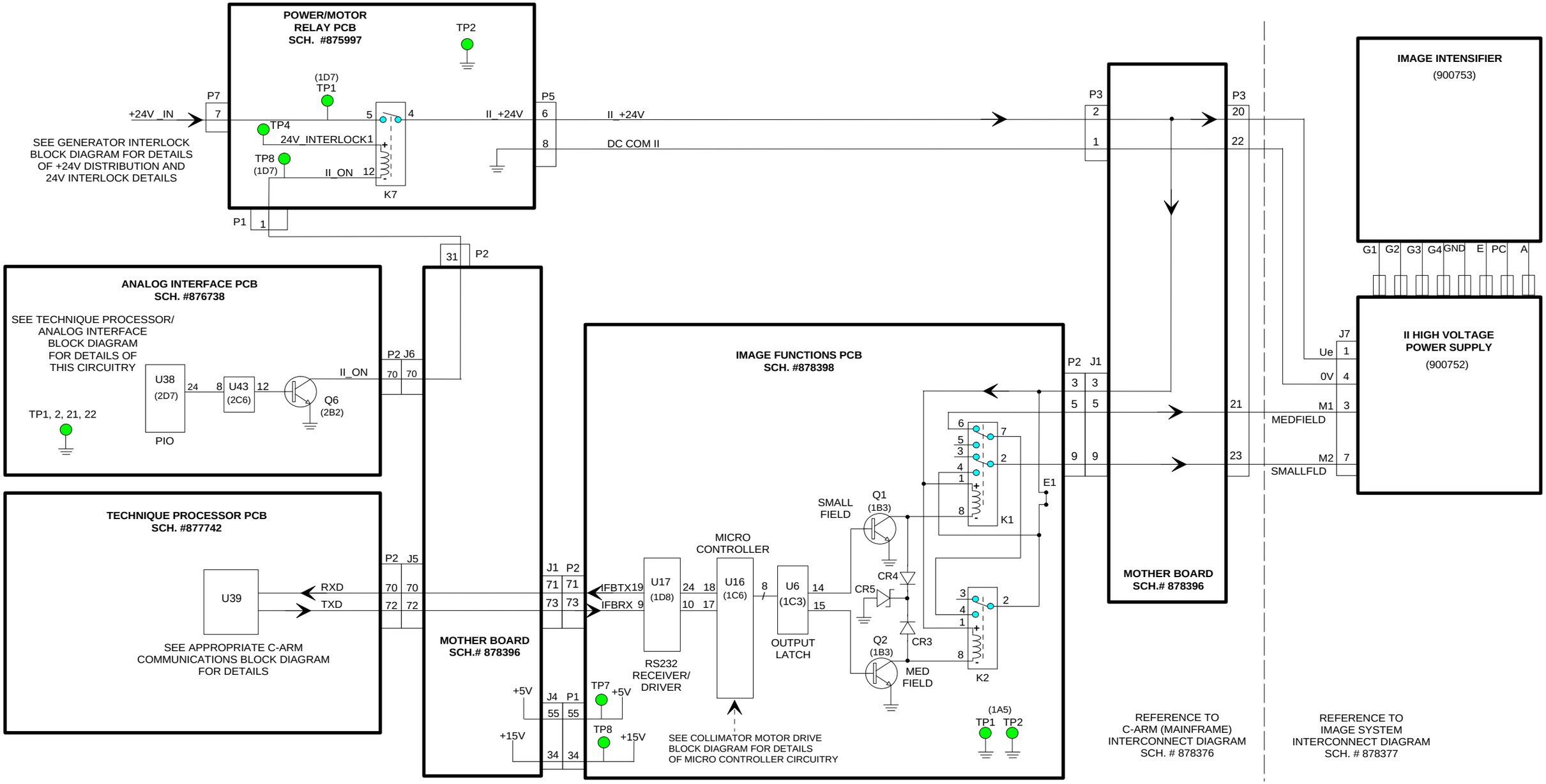

USE THIS PAGE FOR SERIAL NUMBERS 69-2001 AND HIGHER & 62-0001 AND HIGHER

OEC MEDICAL SYSTEMS, INC. Training	9600 C-ARM	
	For Reference Only	Page 2 of 2
	IICNTRLS.DS4	9/19/96

IMAGE INTENSIFIER CONTROLS FUNCTIONAL SCHEMATIC

9600 Mobile Digital C-Arm - Image System Block Diagrams, Test Points, and Waveforms

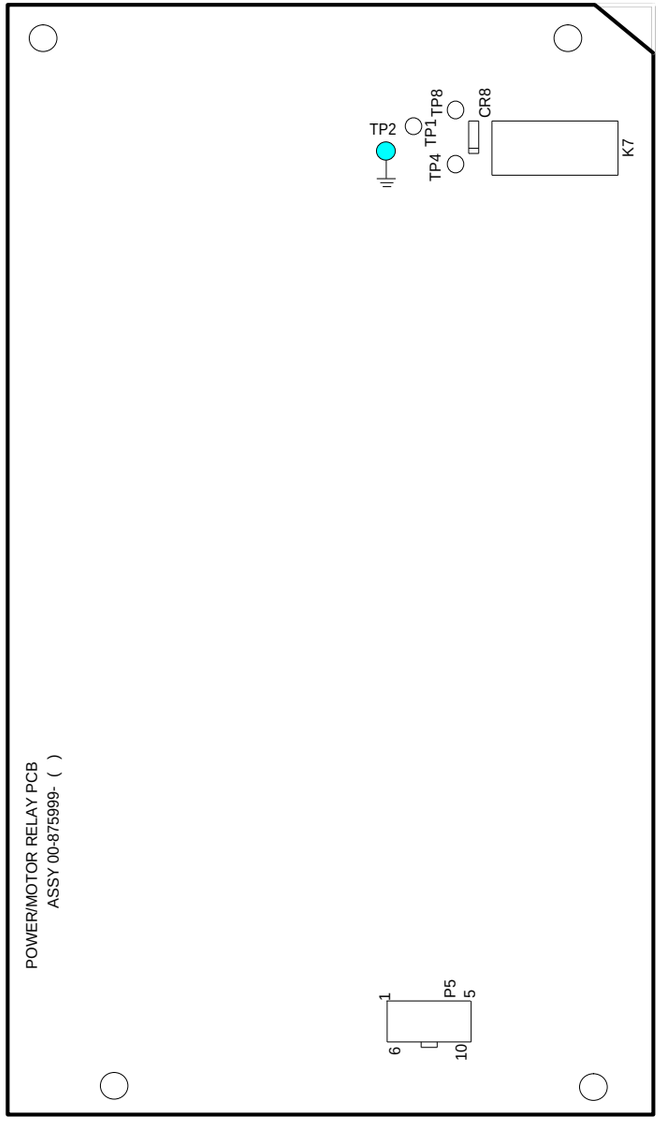

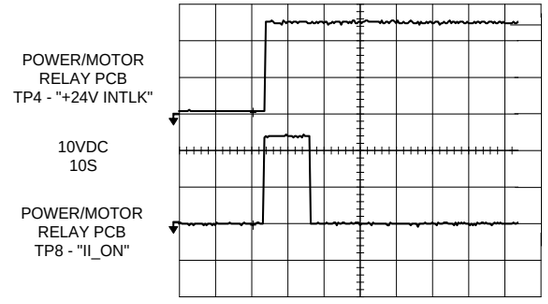

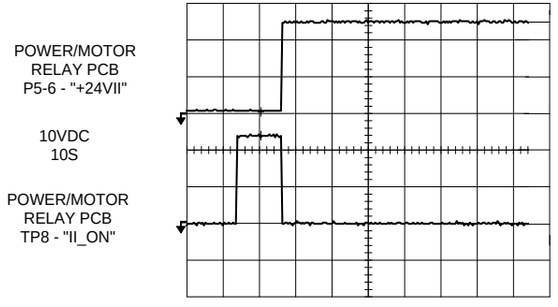

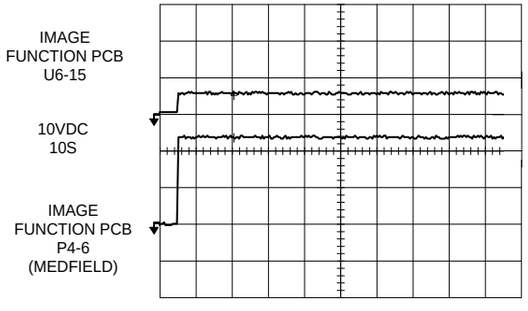

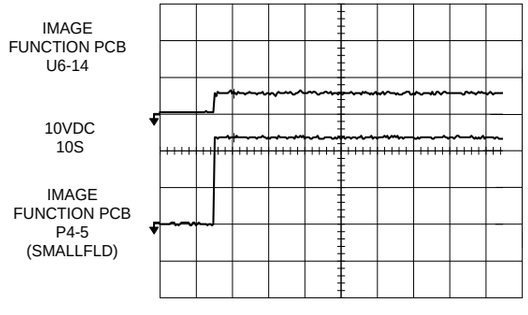

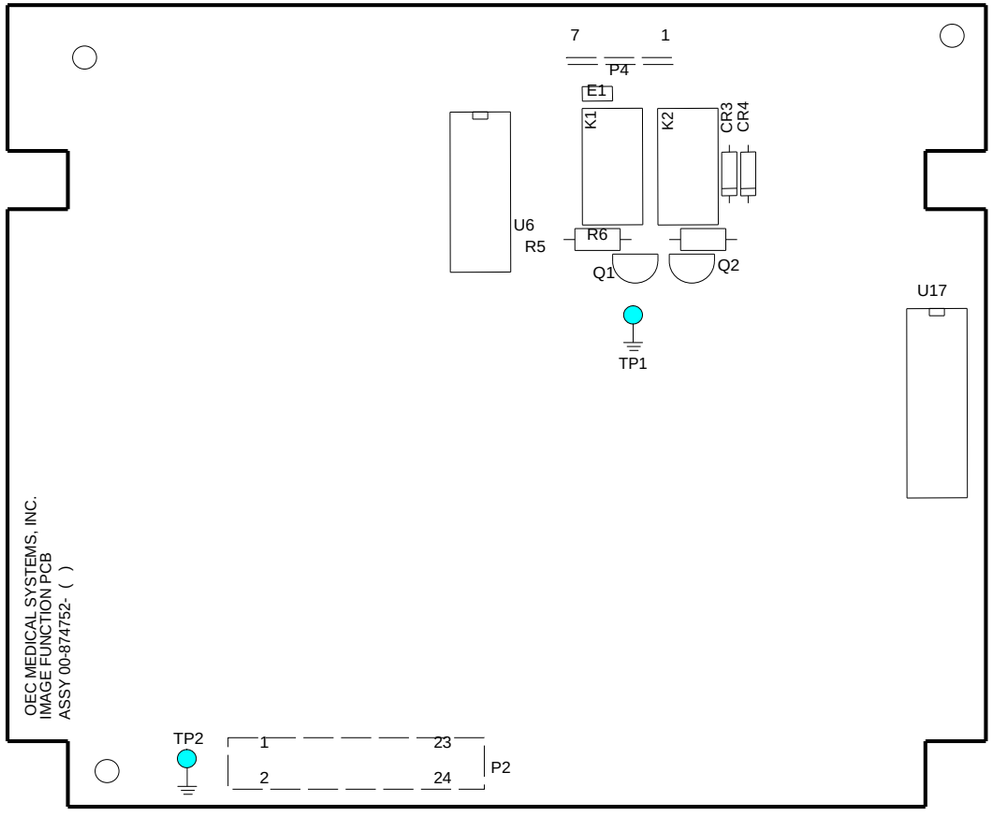

USE THIS PAGE FOR
SERIAL NUMBERS
69-0001 TO 69-2000

OEC MEDICAL SYSTEMS, INC. Training	9600 C-ARM	
	For Reference Only	Page 1 of 2
	II_CNTSS.DS4	10/8/96

IMAGE INTENSIFIER CONTROLS SIGNAL SHEET

9600 Mobile Digital C-Arm - Image System Block Diagrams, Test Points, and Waveforms

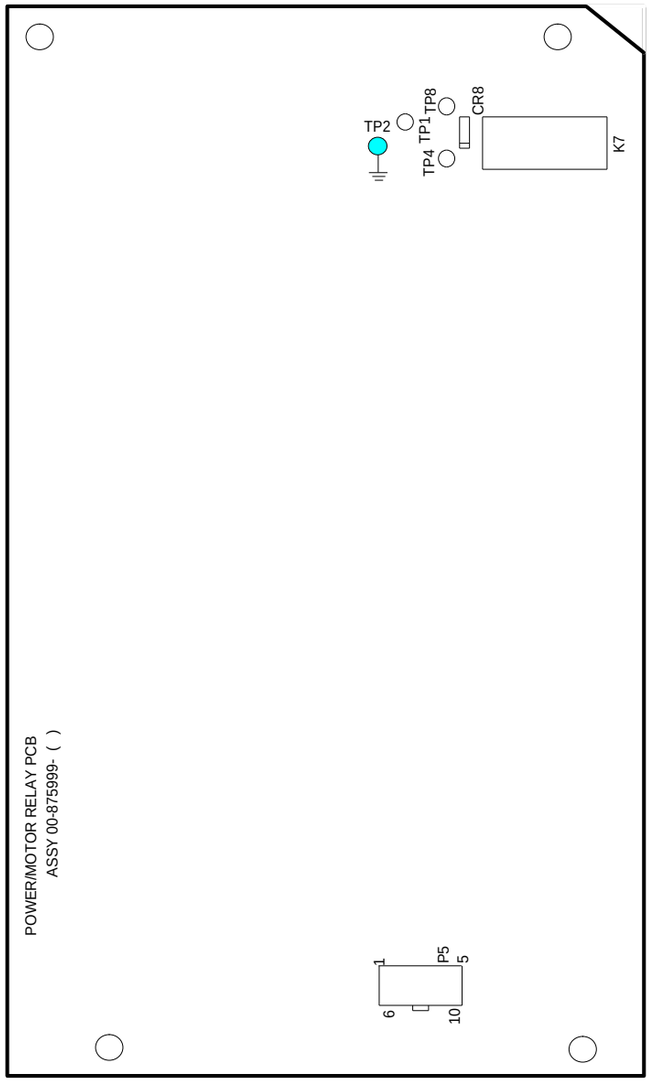

POWER/MOTOR
RELAY PCB
TP4 - "+24V INTLK"

10VDC
10S

POWER/MOTOR
RELAY PCB
TP8 - "II_ON"

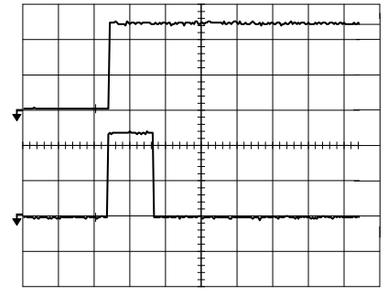

POWER/MOTOR
RELAY PCB
P5-6 - "+24VII"

10VDC
10S

POWER/MOTOR
RELAY PCB
TP8 - "II_ON"

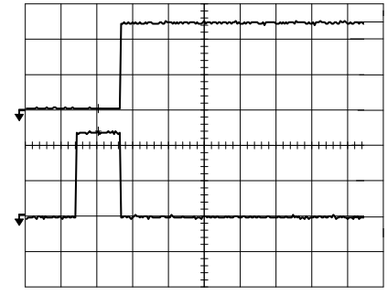

IMAGE
FUNCTION PCB
U6-15

10VDC
10S

IMAGE
FUNCTION PCB
P2-5
(MEDFIELD)

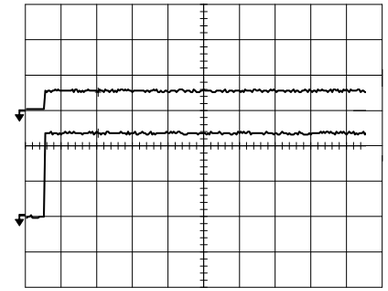

IMAGE
FUNCTION PCB
U6-14

10VDC
10S

IMAGE
FUNCTION PCB
P2-9
(SMALLFLD)

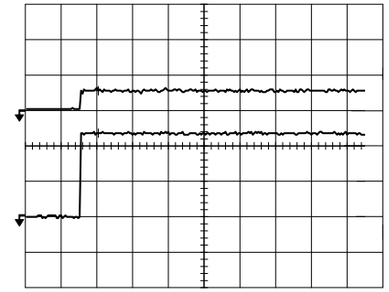

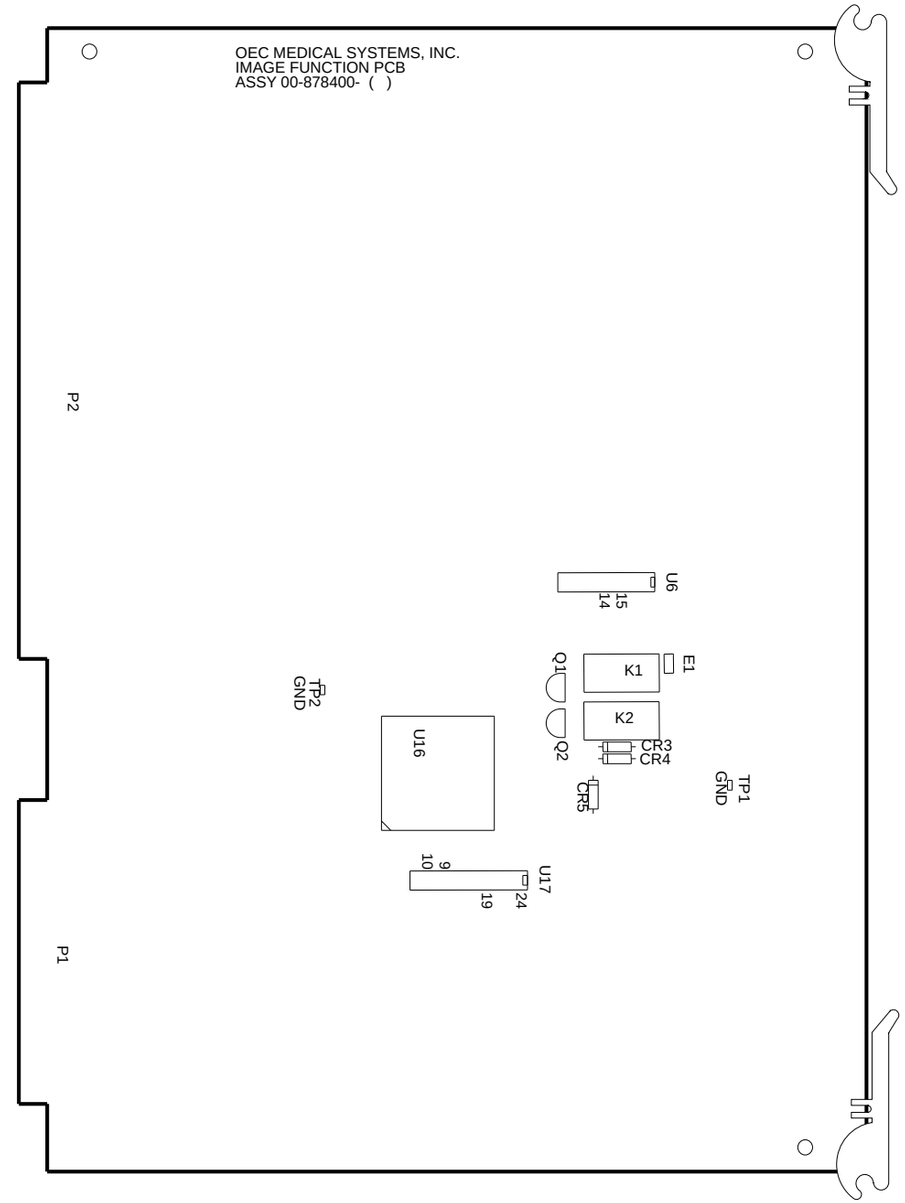

USE THIS PAGE FOR
SERIAL NUMBERS
69-2001 AND HIGHER &
62-0001 AND HIGHTER

OEC MEDICAL SYSTEMS, INC Training	9600 C-ARM	
	For Reference Only	Page 2 of 2
	II_CNTSS.DS4	10/8/96

IMAGE INTENSIFIER CONTROLS SIGNAL SHEET

9600 Mobile Digital C-Arm - Image System Block Diagrams, Test Points, and Waveforms

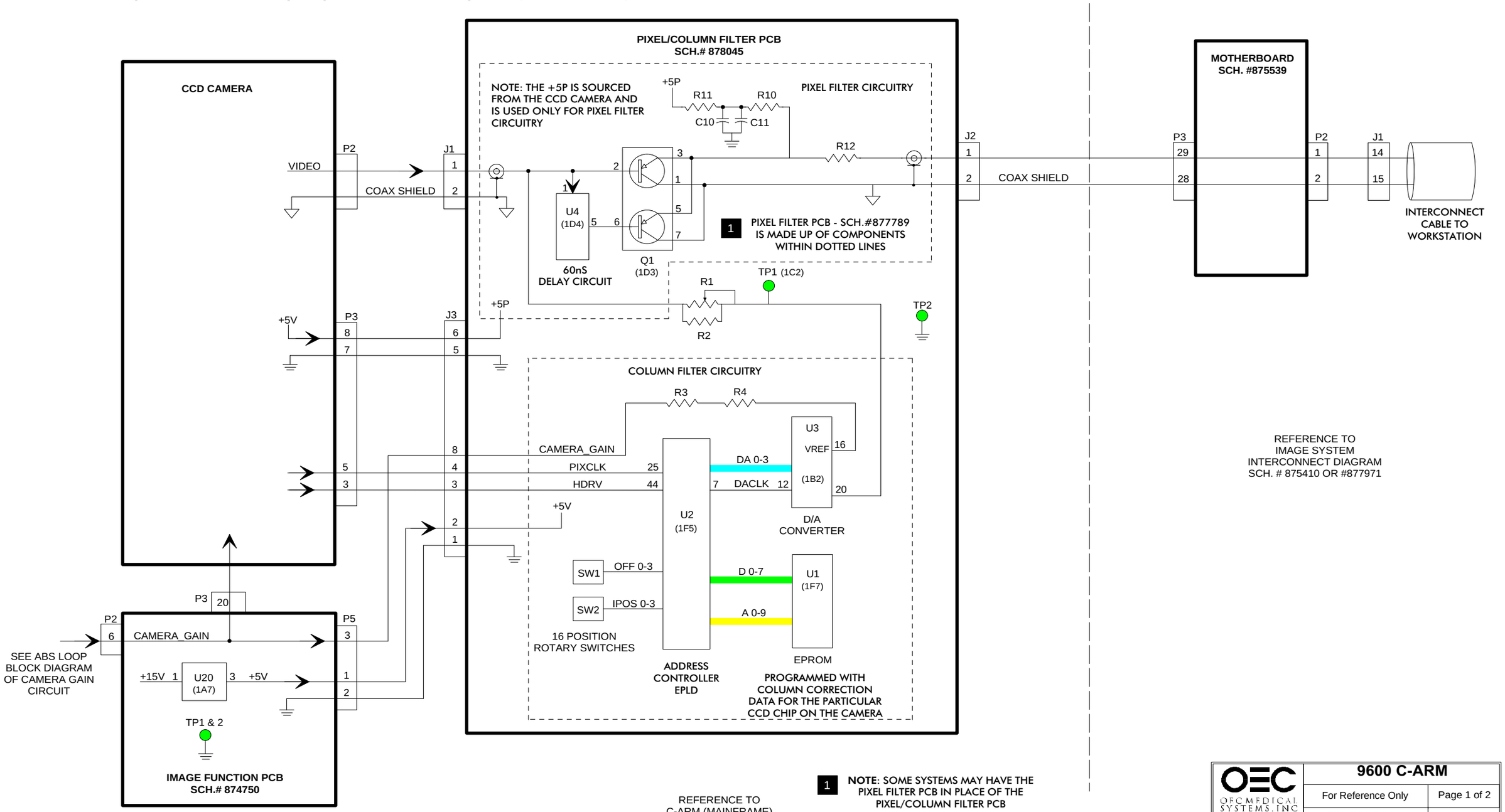

9600 Mobile Digital C-Arm - Image System Block Diagrams, Test Points, and Signal Waveforms

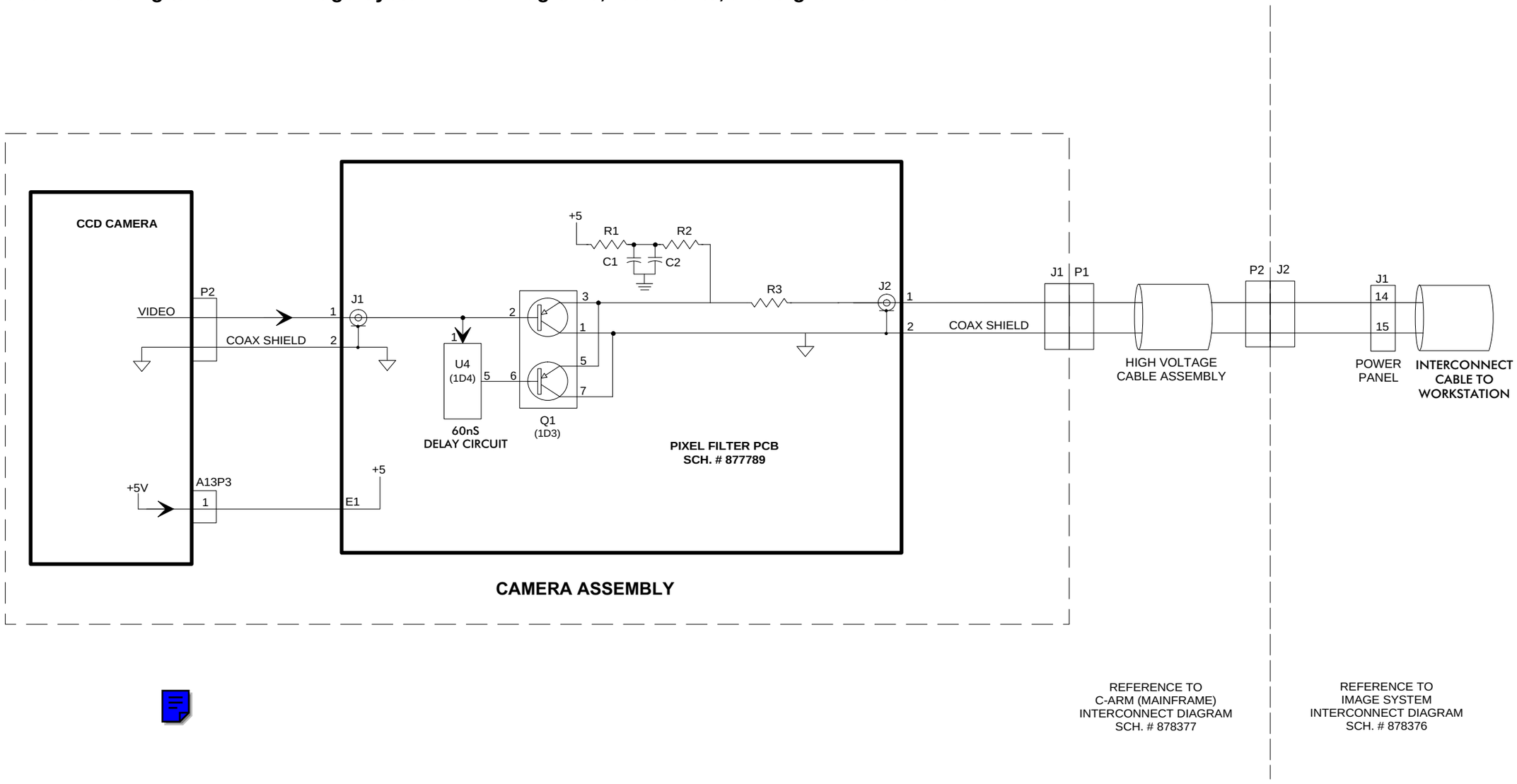

USE THIS PAGE FOR SERIAL NUMBERS 69-2001 AND HIGHER & 62-0001 AND HIGHER

OEC MEDICAL SYSTEMS, INC Training	9600 C-ARM	
	For Reference Only	Page 2 of 2
	PIX_COL.DS4	4/19/96
CAMERA VIDEO & PIXEL/COLUMN FILTER PCB		

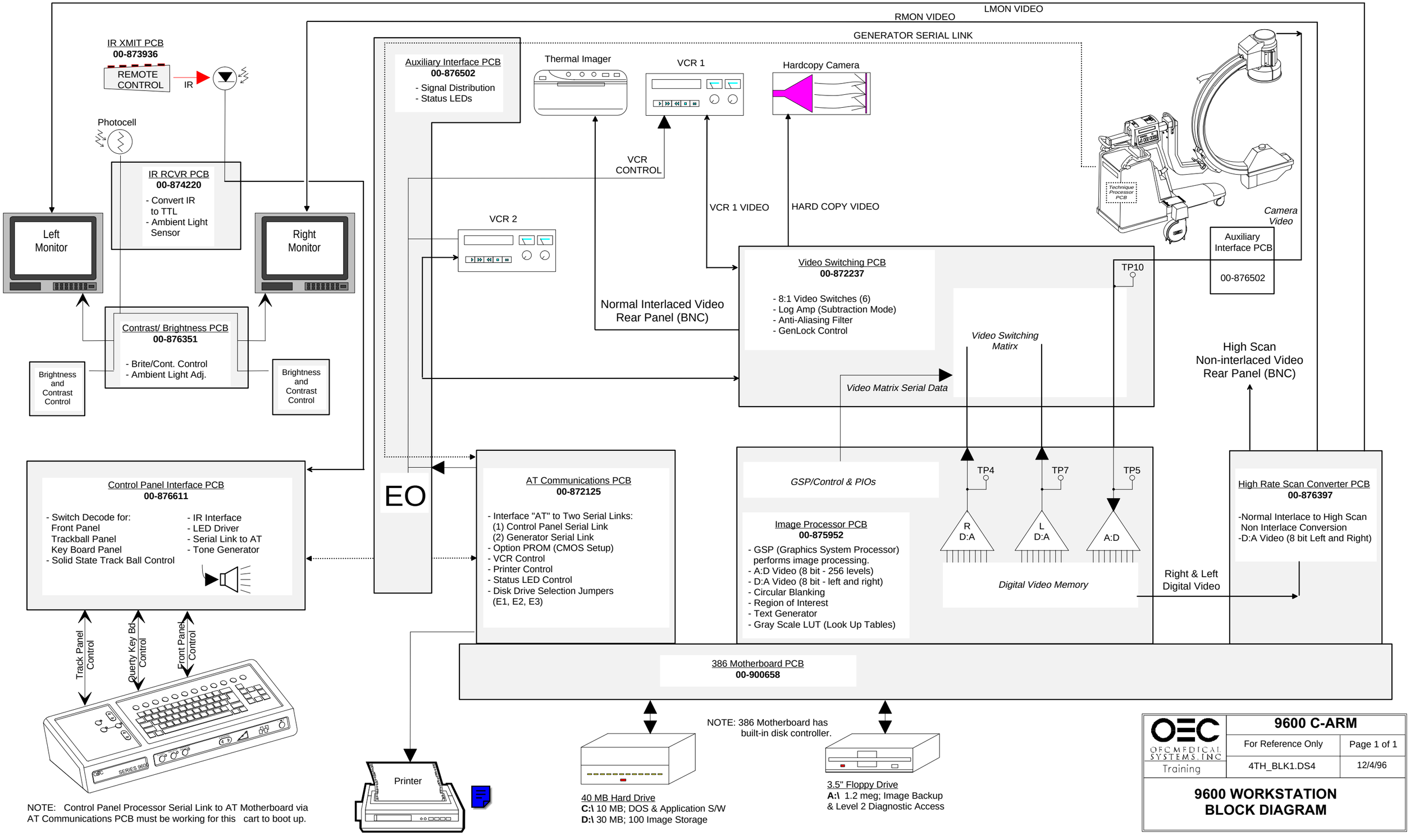
LMON VIDEO
RMON VIDEO
GENERATOR SERIAL LINK
IR XMIT PCB
00-873936
REMOTE CONTROL
IR
Photocell
IR RCVR PCB
00-874220
- Convert IR to TTL
- Ambient Light Sensor
Left Monitor
Right Monitor
Contrast/ Brightness PCB
00-876351
- Brite/Cont. Control
- Ambient Light Adj.
Brightness and Contrast Control
Brightness and Contrast Control
Auxiliary Interface PCB
00-876502
- Signal Distribution
- Status LEDs
Thermal Imager
VCR 1
Hardcopy Camera
VCR CONTROL
VCR 1 VIDEO
HARD COPY VIDEO
VCR 2
Technique Processor PCB
Camera Video
Auxiliary Interface PCB
00-876502
Normal Interlaced Video Rear Panel (BNC)
Video Switching PCB
00-872237
- 8:1 Video Switches (6)
- Log Amp (Subtraction Mode)
- Anti-Aliasing Filter
- GenLock Control
TP10
Video Switching Matirx
Video Matrix Serial Data
High Scan Non-interlaced Video Rear Panel (BNC)
Control Panel Interface PCB
00-876611
- Switch Decode for:
Front Panel
Trackball Panel
Key Board Panel
- Solid State Track Ball Control
- IR Interface
- LED Driver
- Serial Link to AT
- Tone Generator
EO
AT Communications PCB
00-872125
- Interface "AT" to Two Serial Links:
(1) Control Panel Serial Link
(2) Generator Serial Link
- Option PROM (CMOS Setup)
- VCR Control
- Printer Control
- Status LED Control
- Disk Drive Selection Jumpers (E1, E2, E3)
GSP/Control & PIOs
Image Processor PCB
00-875952
- GSP (Graphics System Processor) performs image processing.
- A:D Video (8 bit - 256 levels)
- D:A Video (8 bit - left and right)
- Circular Blanking
- Region of Interest
- Text Generator
- Gray Scale LUT (Look Up Tables)
TP4
TP7
TP5
R D:A
L D:A
A:D
Digital Video Memory
Right & Left Digital Video
High Rate Scan Converter PCB
00-876397
-Normal Interlace to High Scan Non Interlace Conversion
-D:A Video (8 bit Left and Right)
Track Panel Control
Querty Key Bd Control
Front Panel Control
386 Motherboard PCB
00-900658
NOTE: 386 Motherboard has built-in disk controller.
Printer
40 MB Hard Drive
C:\ 10 MB; DOS & Application S/W
D:\ 30 MB; 100 Image Storage
3.5" Floppy Drive
A:\ 1.2 meg; Image Backup & Level 2 Diagnostic Access
NOTE: Control Panel Processor Serial Link to AT Motherboard via AT Communications PCB must be working for this cart to boot up.
OEC
OEC MEDICAL SYSTEMS, INC
Training
9600 C-ARM
For Reference Only
Page 1 of 1
4TH_BLK1.DS4
12/4/96
9600 WORKSTATION BLOCK DIAGRAM

DISK DRIVE SELECTION JUMPERS E1-E3

Jumpers located on AT Communications PCB

SYSTEM TYPE MOTHERBOARD & DISK	E1	E2	E3
386 (AMI BIOS) WITH IDE DISK	+	+	G
386 (AMI BIOS) WITH SCSI DISK	G	+	G

BIOS ROM\BOOT CODES

E0 - Normal Boot Code
98 - Hard Disk Error
90 - Boot Disk Not Available
82 - GSP Load Failure
BE - Boot-up with Diagnostic Diskette.
FO - Workstation Program Exited to DOS
(Internal Workstation Communications Error "System Error #253")

For a complete listing of BIOS ROM codes, see Service Manual Workstation Software Section.

Status LEDs

U25 Option Prom
- Programs UARTs U20, 22, 26, & 27 and then loads CGA Driver for IP PCB.
- Verifies/rewrites AT CMOS RAM.

E4 Jumper
- Remove this jumper to disable internal CGA (Image Processor) video driver when using an external CGA/EGA video card (for diagnostic purposes only)

See Control Panel Processor Block Diagram

Serial link to AT Comm. PCB

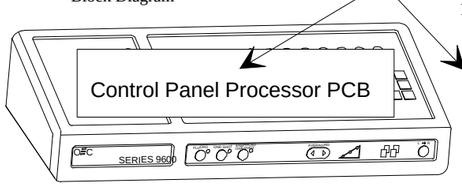

NOTE: Control Panel Interface Serial Link to Motherboard via AT Communications PCB must work for normal cart boot-up process.

386 (NO 4 OR 30FPS) MINIMUM CONFIGURATION (Verify the Motherboard)

1. To boot the Motherboard, the AT Communications PCB can first be removed. The floppy drive should still be accessed (with the service boot disk).

2. Next, the Image Processor can be removed. The floppy drive should still be accessed (with the service boot disk) but no monitor images will be displayed when the Image Processor is removed.

NOTE: An external video card and monitor can be used to observe the motherboard boot process and to examine A: & C: drives. Remember to remove jumper E4 on the AT Comm. PCB to monitor mother board boot process.

3. If the system still fails to boot, verify power. See Workstation Power Block Diagram. Finally , the Motherboard may need to be replaced..

386 (WITH 4 OR 30 FPS) MINIMUM CONFIGURATION (Verify the Motherboard)

1. To boot the Motherboard, the IP-SCSI board(s) can first be removed. The floppy drive should still be accessed (with the service boot disk).

2. The AT Communications PCB can be removed. The floppy drive should still be accessed (with the service boot disk).

3. Next, remove the DOS SCSI Disk Controller PCB. The floppy should be accessed. (with the service boot disk)

4. Then, the Image Processor can be removed. The floppy drive should still be accessed (with the service boot disk) but no monitor images will be displayed when the Image Processor is removed.

NOTE: An external video card and monitor can be used to observe the Motherboard boot process and to examine the A: drive. Remember to remove jumper E4 on the AT Comm. PCB to monitor mother board boot process.

5. If the system still fails to boot, verify power. See Workstation . Power Block Diagram. Finally, try replacing the Motherboard.

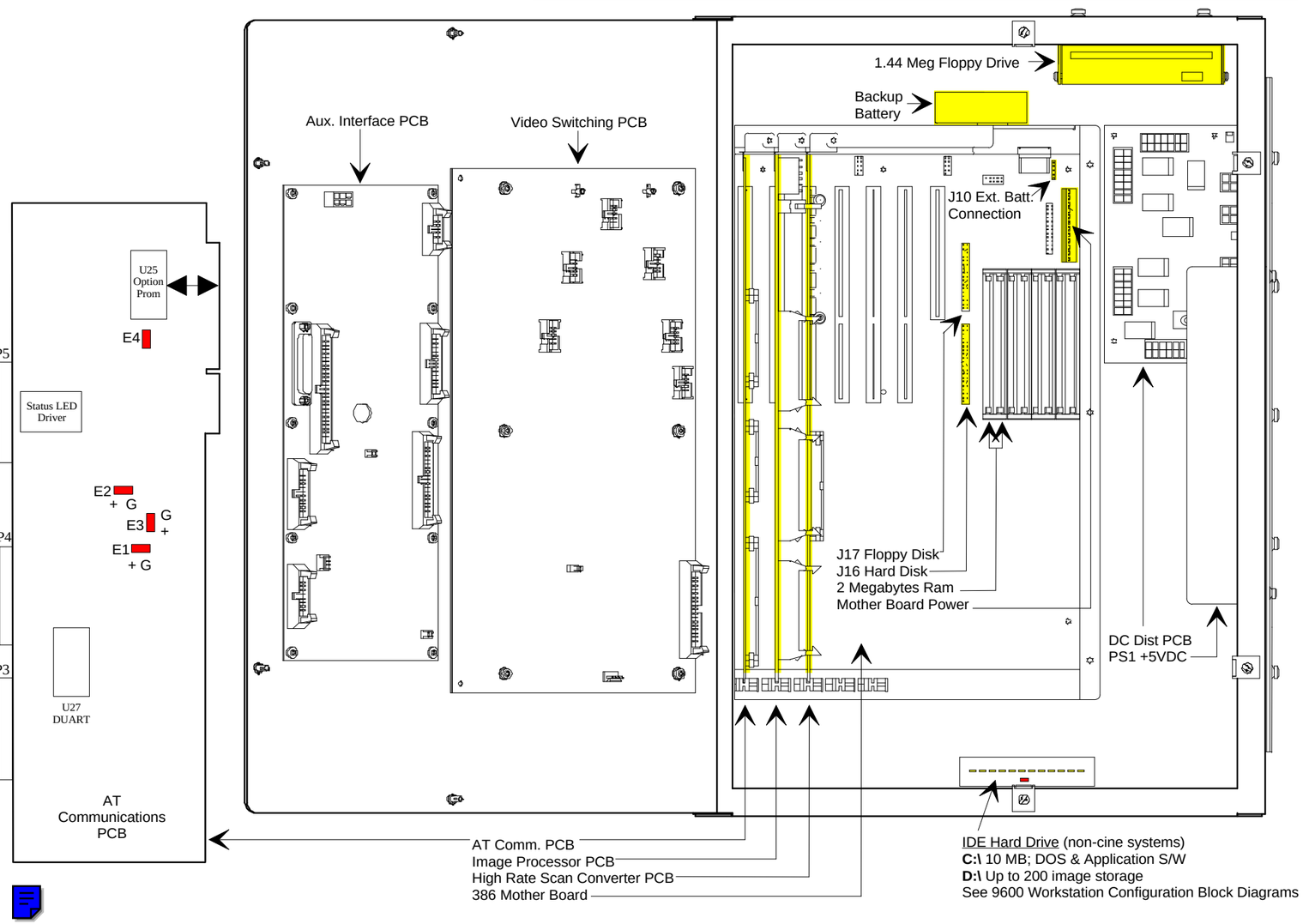

386 Mother PCB Boot Sequence Screen (Viewed on external monitor using an external video card with jumper E4 Removed from AT Comm. PCB)

AMIBIOS (C)1991 American Megatrends Inc.,
386NSX - P/Ns 06018-07 - 9/17/92

001664 KB OK

WAIT.....

Adaptec AHA-1520 BIOS
Version 1.4
Copyright 1990 Adaptec, Inc.
All Rights Reserved

AMIBIOS System Configuration
(C) 1985-1991, American Megatrends Inc.

Main Processor	: 80386SX	Base Memory Size	: 640 KB
Numeric Processor	: None	Ext. Memory Size	: 1024 KB
Floppy Drive A:	: 1.44 MB, 3.5"	Hard Disk C Type	: 35
Floppy Drive B:	: None	Hard Disk D Type	:None
Display Type	: Color 80X25	Serial Port(s)	: 3F8, 2F8
AMIBIOS Date	: 12/12/91	Paralell Port(s)	: 378

HiMEM: DOS XMS Driver, Version 2.78 - 09/19/91
XMS Specification Version 2.0
Copyright 1988-1991 Microsoft Corp.

Installed A20 Handler Number 1.
64K High Memory Area is available.

MICROSOFT Expanded Memory

MICROSOFT Expanded Memory Manager 386 Version 4.33.06X
(C) Copyright Microsoft Corporation 1986, 1990

EMM386 successfully installed.

Available expanded memory .....256 KB

LIM/EMS version.....4.0
Total expanded memory pages.....40
Available expanded memory pages....16
Total handles.....64
Active handles.....1
Page frame segment....CC00 H

Total upper memory available...15 KB
Larges upper memory block available....15 KB
Upper memory starting address....C800 H

EMM386 Active.
MS-DOS Version 5.00
NBKSHELL Loaded
FASTOPEN installed
TSRSER Loaded Sucessfully

OEC OFC MEDICAL SYSTEMS, INC Training	9600 WORKSTATION	
	For Reference Only	Page 1 of 1
	4TH_AT2.DS4	12/5/96

9600 WORKSTATION MOTHERBOARD BLOCK DIAGRAM

SYSTEM CONFIGURATION

1. Press **"SETUP OPTIONS"** on the annotation keyboard
2. Install the service disk in the floppy drive at the rear of the Workstation
3. Select **"Access Level 2"** from the menu
4. Select **"System Configuration"** from the menu
5. Select **"Set System Configurations"** from the menu
6. Set the configuration by making selections from the following menu:

SET CONFIGURATION

Line Frequency (Hz):	60
System Model:	SP
Archive:	0
Language:	ENGLISH
Serial Number:	69-1107
Hospital Name:	OEC TRAINING
Mars Table:	DOMESTIC
Date Format:	MM/DD/YYYY

Use the cursor arrow keys to select

Press [ENTER] to accept

Press [ESC] to exit

SOFTWARE VERSION	FORMATTED HARD DISK PART #	DISK CONTROLLER PART #	AT COMM. PCB OPTION PROM (U25)	DRIVE PARTIONING
10	00-877024-02	NONE	-02	C: DRIVE 10M D: DRIVE 30M
11	00-877024-03	NONE	-03	C: DRIVE 10M D: DRIVE 60M

NOTES

Drives used: Fujitsu M2684TAU
Seagate ST3660A
Western Digital AC1365

See page 2 for hard drive jumper settings.

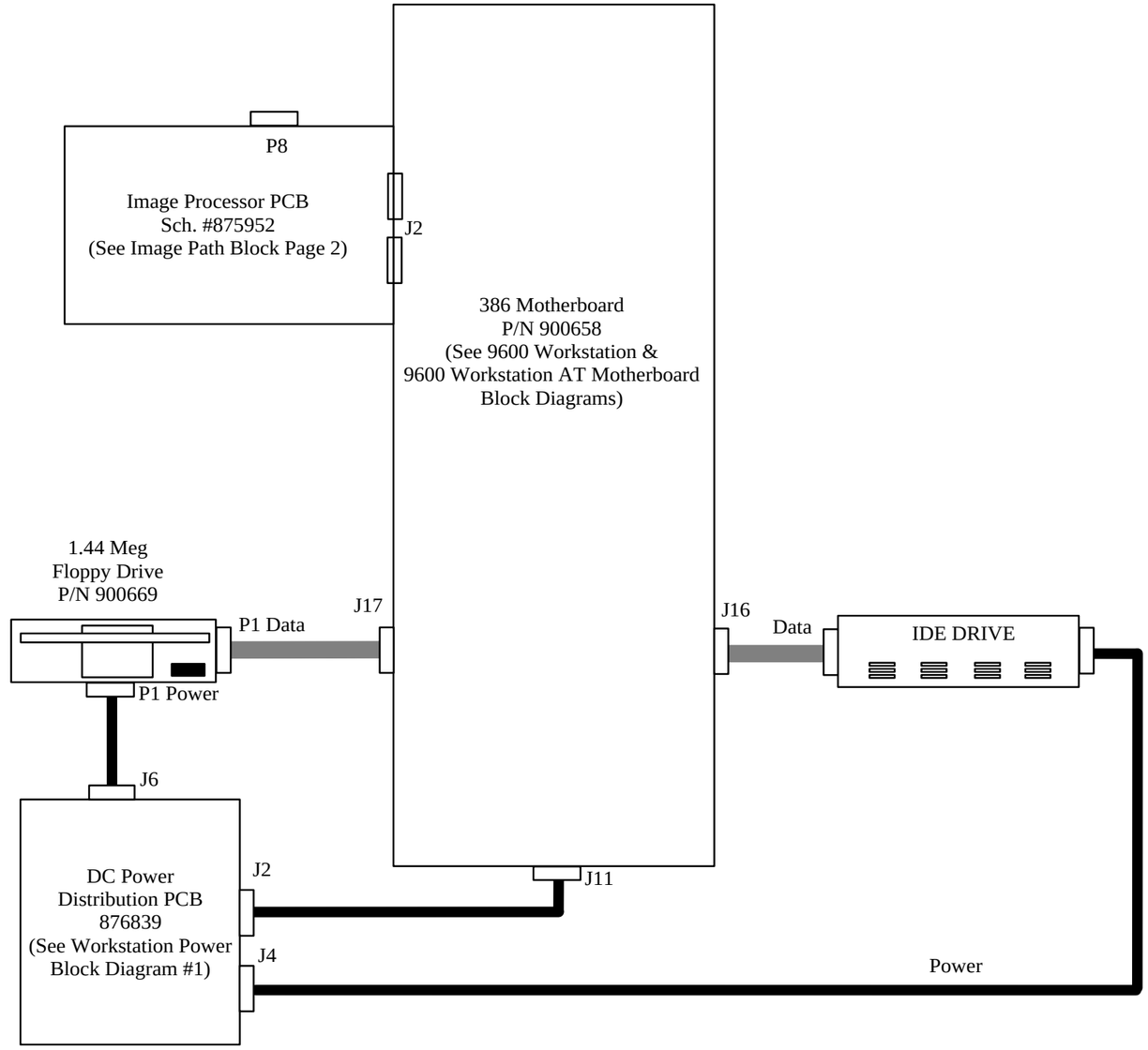

TRACKPAD PANEL

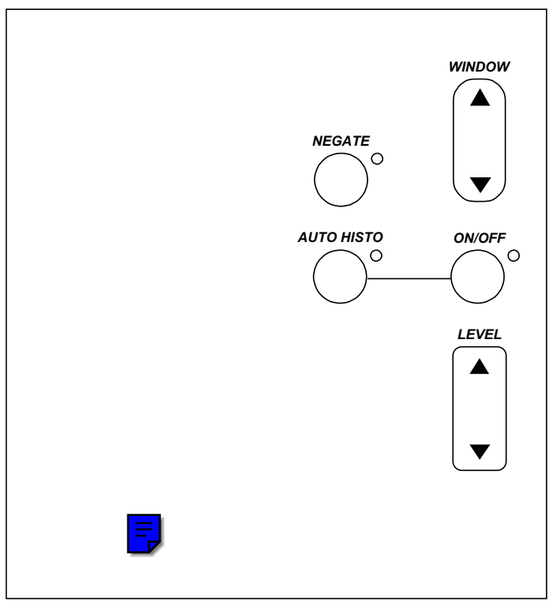

AT COMMUNICATIONS BOARD
DISK DRIVE SELECTION JUMPERS E1-E3
FOR IDE DISKS

SYSTEM TYPE MOTHERBOARD & DISK	E1	E2	E3
386 (AMI BIOS) WITH IDE DISK	+	+	G

See also 9600 Workstation Motherboard Block Diagram

FRONT PANEL

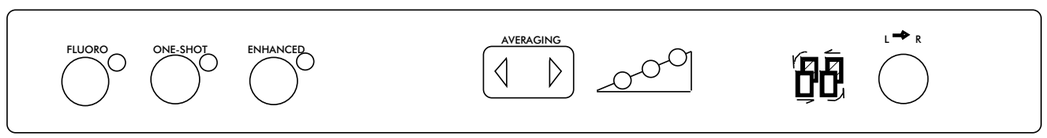

OEC MEDICAL SYSTEMS, INC
Training

9600 C-ARM

For Reference Only | Page 1 of 4

NON_CINE.DS4 | 11/13/96

9600 WORKSTATION

SP, GSP, ESP - (NON CINE) CONFIGURATIONS

SP SOFTWARE & HARDWARE CONFIGURATION

SYSTEM CONFIGURATION

1. Press **"SETUP OPTIONS**" on the annotation keyboard
2. Install the service disk in the floppy drive at the rear of the Workstation
3. Select **"Access Level 2"** from the menu
4. Select **"System Configuration"** from the menu
5. Select **"Set System Configurations"** from the menu
6. Set the configuration by making selections from the following menu:

SET CONFIGURATION

Line Frequency (Hz):	60
System Model:	SP
Archive:	4
Language:	ENGLISH
Serial Number:	69-1107
Hospital Name:	OEC TRAINING
Mars Table:	DOMESTIC
Date Format:	MM/DD/YYYY

Use the cursor arrow keys to select

Press [ENTER] to accept

Press [ESC] to exit

SOFTWARE VERSION	FORMATTED HARD DISK PART #	DISK CONTROLLER PART #	AT COMM. PCB OPTION PROM (U25)	DRIVE PARTIONING
10	00-877024-02	NONE	-02	C: DRIVE 10M D: DRIVE 30M
11	00-877024-03	NONE	-03	C: DRIVE 10M D: DRIVE 60M

NOTES

Drives used: Fujitsu M2684TAU
Seagate ST3660A
Western Digital AC1365

See page 2 for hard drive jumper settings.

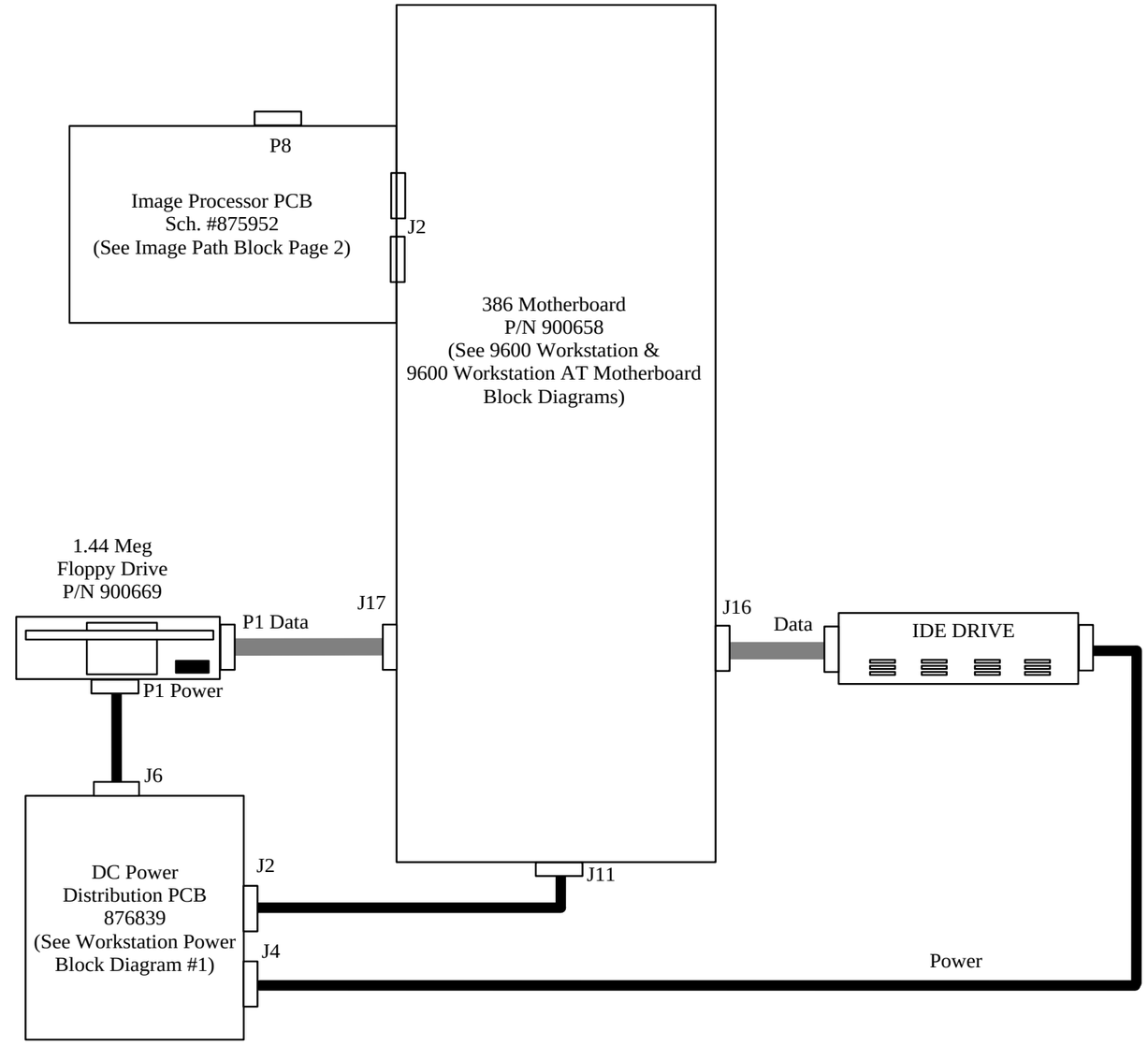

TRACKPAD PANEL

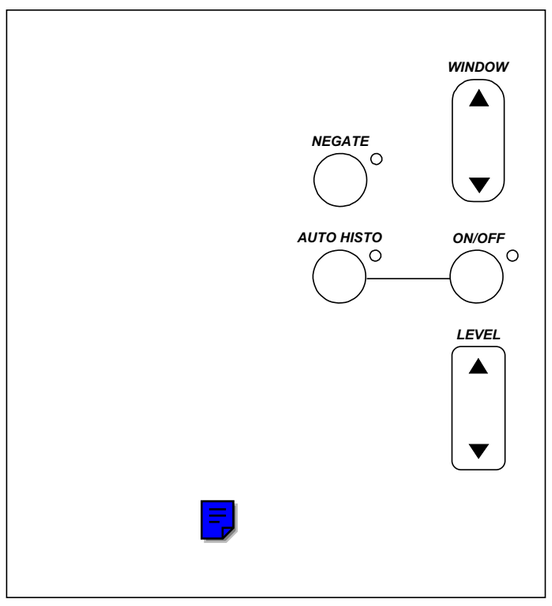

AT COMMUNICATIONS BOARD
DISK DRIVE SELECTION JUMPERS E1-E3
FOR IDE DISKS

SYSTEM TYPE MOTHERBOARD & DISK	E1	E2	E3
386 (AMI BIOS) WITH IDE DISK	+	+	G

See also 9600 Workstation Motherboard Block Diagram

FRONT PANEL

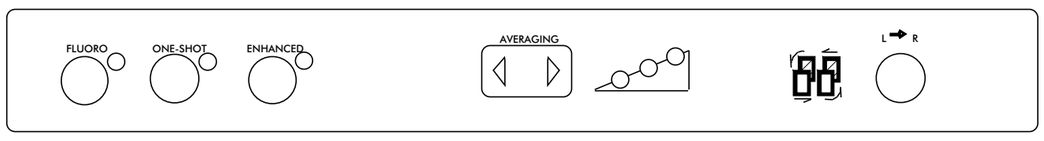

OEC MEDICAL SYSTEMS, INC Training	9600 C-ARM	
	For Reference Only	Page 2 of 4
	NON_CINE.DS4	11/13/96

9600 WORKSTATION

SP, GSP, ESP - (NON CINE) CONFIGURATIONS

GSP SOFTWARE & HARDWARE CONFIGURATION

SYSTEM CONFIGURATION

1. Press **"SETUP OPTIONS**" on the annotation keyboard
2. Install the service disk in the floppy drive at the rear of the Workstation
3. Select **"Access Level 2"** from the menu
4. Select **"System Configuration"** from the menu
5. Select **"Set System Configurations"** from the menu
6. Set the configuration by making selections from the following menu:

SET CONFIGURATION

Line Frequency (Hz):	60
System Model:	ESP
(Digital Spot Option:	Yes/No)
Cine Disk:	None
Language:	ENGLISH
VCR1:	Sony
VCR2:	Sony
Digital Print:	No
Serial Number:	69-1107
Hospital Name:	OEC TRAINING
Mars Table:	DOMESTIC
Measurements:	NO
Date Format:	MM/DD/YYYY

Use the cursor arrow keys to select

Press [ENTER] to accept

Press [ESC] to exit

SOFTWARE VERSION	FORMATTED HARD DISK PART #	DISK CONTROLLER PART #	AT COMM. PCB OPTION PROM (U25)	DRIVE PARTIONING
10	00-877024-02	NONE	-02	C: DRIVE 10M D: DRIVE 30M
11	00-877024-03	NONE	-03	C: DRIVE 10M D: DRIVE 60M

NOTES

Drives used: Fujitsu M2684TAU
Seagate ST3660A
Western Digital AC1365

See page 2 for hard drive jumper settings.

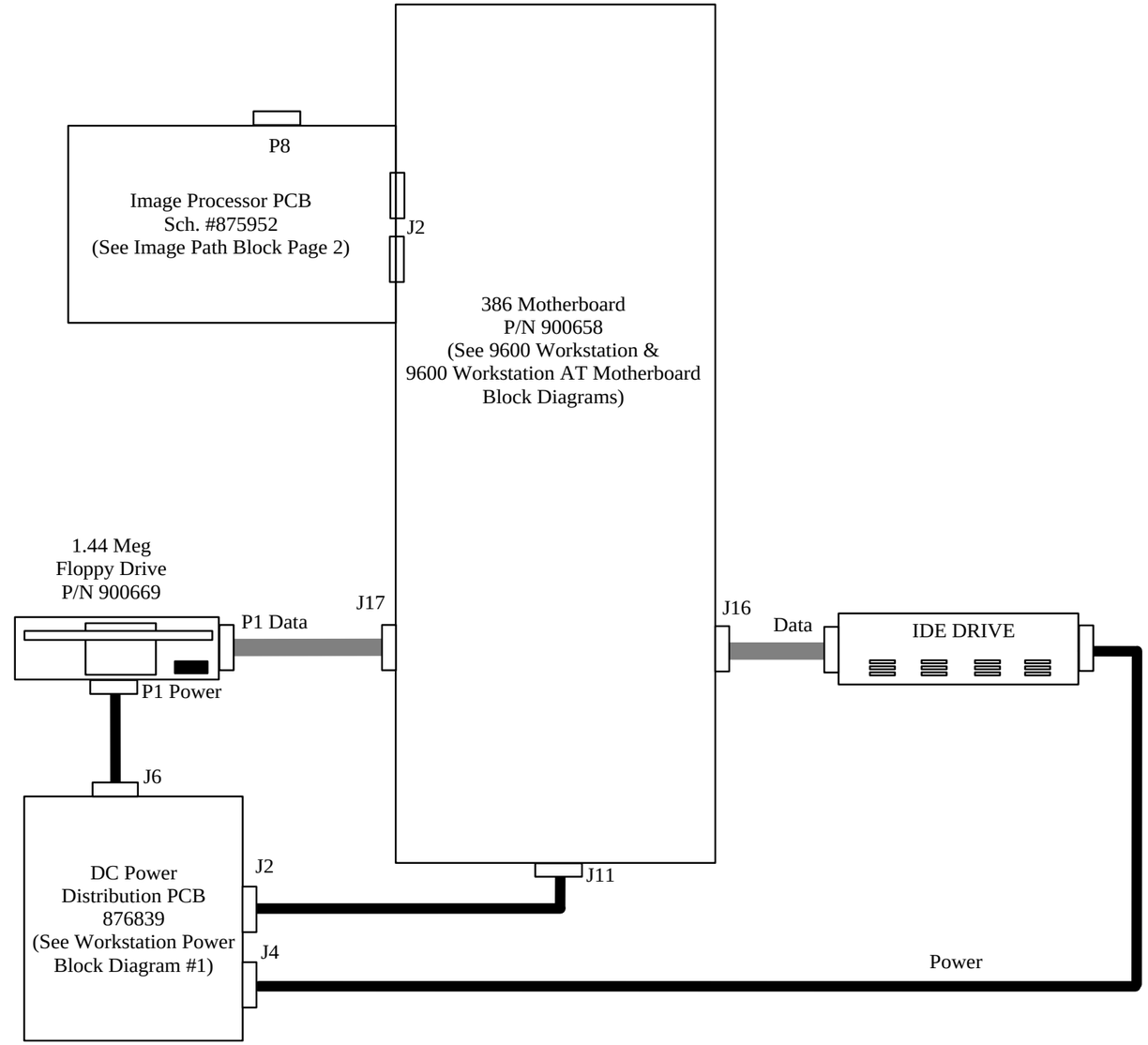

TRACKPAD PANEL

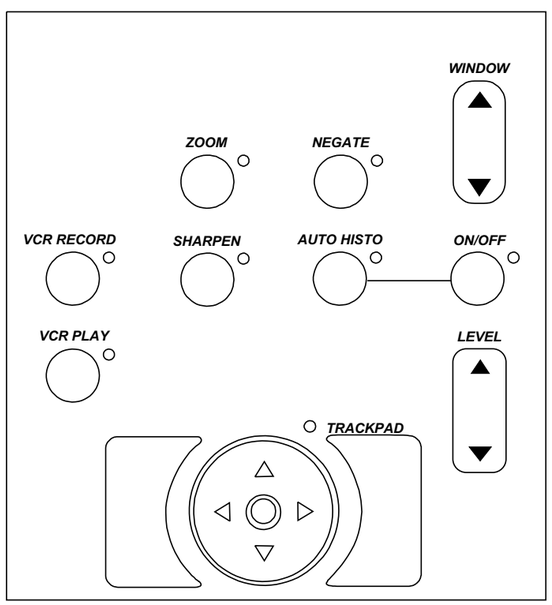

AT COMMUNICATIONS BOARD
DISK DRIVE SELECTION JUMPERS E1-E3
FOR IDE DISKS

SYSTEM TYPE MOTHERBOARD & DISK	E1	E2	E3
386 (AMI BIOS) WITH IDE DISK	+	+	G

See also 9600 Workstation Motherboard Block Diagram

FRONT PANEL

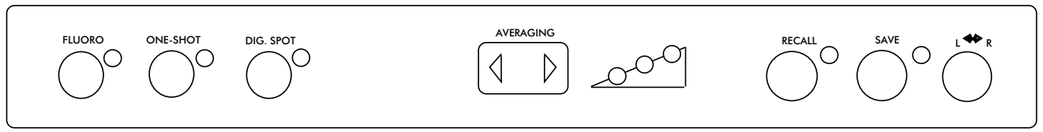

OEC MEDICAL SYSTEMS, INC Training	**9600 C-ARM**	
	For Reference Only	Page 3 of 4
	NON_CINE.DS4	11/13/96

9600 WORKSTATION

SP, GSP, ESP - (NON CINE) CONFIGURATIONS

ESP SOFTWARE & HARDWARE CONFIGURATION

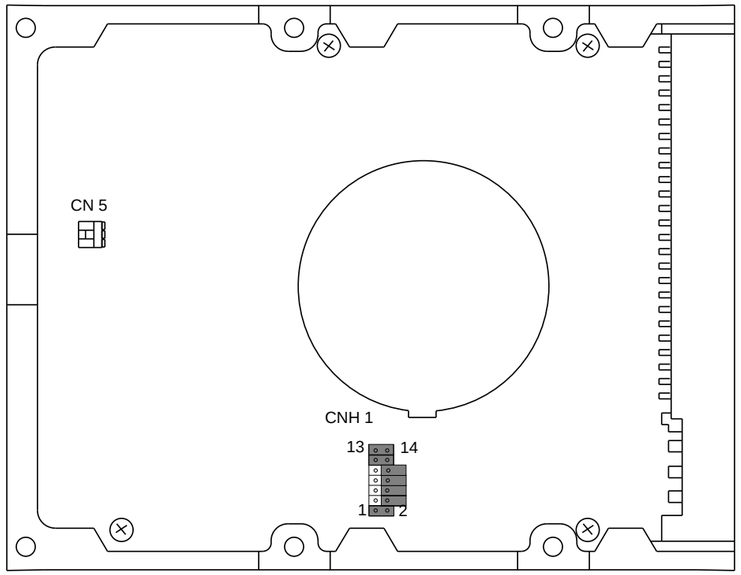

FUJITSU M2684TA

JUMPER AS ILLUSTRATED

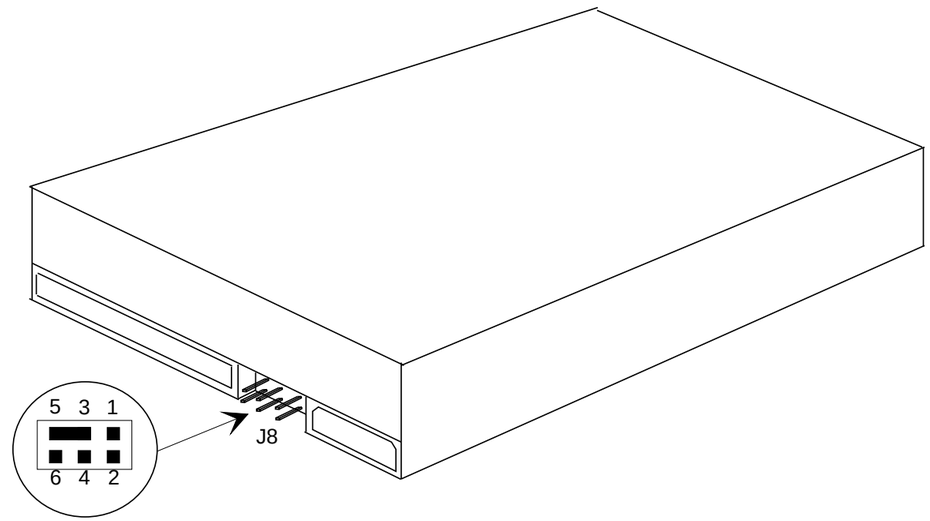

WESTERN DIGITAL AC 1365

JUMPER AS ILLUSTRATED

SEAGATE ST3660A

JUMPER AS ILLUSTRATED

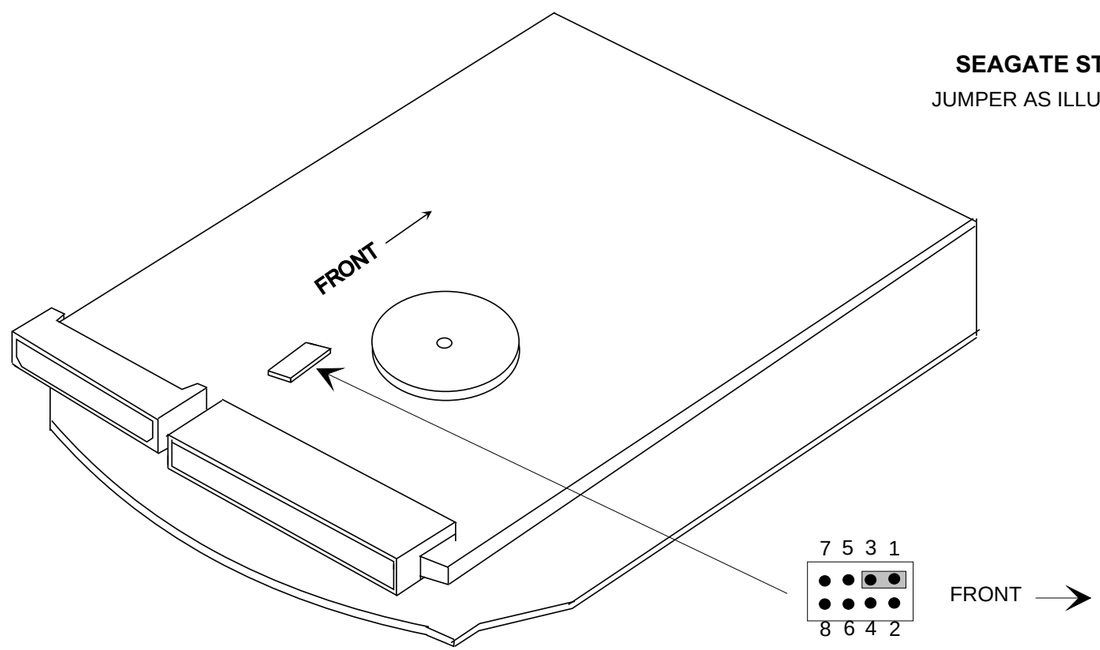

OEC MEDICAL SYSTEMS, INC. Training	**9600 C-ARM**	
	For Reference Only	Page 4 of 4
	NON_CINE.DS4	11/13/96

9600 WORKSTATION

SP, GSP, ESP - (NON CINE) CONFIGURATIONS

JUMPER SETTINGS FOR IDE DRIVES

SYSTEM CONFIGURATION

1. Press **"SETUP OPTIONS"** on the annotation keyboard
2. Install the service disk in the floppy drive at the rear of the Workstation
3. Select **"Access Level 2"** from the menu
4. Select **"System Configuration"** from the menu
5. Select **"Set System Configurations"** from the menu
6. Set the configuration by making selections from the following menu:

SET CONFIGURATION

Line Frequency (Hz):	60
System Model:	ESP
Digital Spot Option:	Yes
Cine Disk:	ALTA4
Language:	ENGLISH
VCR1:	Sony
VCR2:	Sony
Digital Print:	No
Serial Number:	69-1107
Hospital Name:	OEC TRAINING
Mars Table:	DOMESTIC
Measurements:	NO
Date Format:	MM/DD/YYYY

Use the cursor arrows to select
Press [ENTER] to accept
Press [ESC] to exit

SOFTWARE VERSION	FORMATTED HARD DISK PART #	DOS SCSI DISK CONTROLLER PART #	IP-SCSI DISK CONTROLLER PART #	AT COMM. PCB OPTION PROM (U25)	DRIVE PARTIONING
10	00-877025-01	00-900659-02 ADAPTEC	00-900661-01	-02	C: DRIVE 10M D: DRIVE 30M
11	00-877025-02	00-900659-02 ADAPTEC	00-900661-01	-03	C: DRIVE 10M D: DRIVE 60M

NOTES

Drives used: Fujitsu M2684SAU, M2623FA, or M2624FA
Seagate ST3550N or ST5660N
Hitachi DK325C-57

See pages 5 & 6 for hard drive jumper settings.

AT COMMUNICATIONS BOARD DISK DRIVE SELECTION JUMPERS E1-E3 FOR SCSI DISKS

SYSTEM TYPE MOTHERBOARD & DISK	E1	E2	E3
386 (AMI BIOS) WITH SCSI DISK	G	+	G

See also 9600 Workstation Motherboard Block Diagram

TRACKPAD PANEL

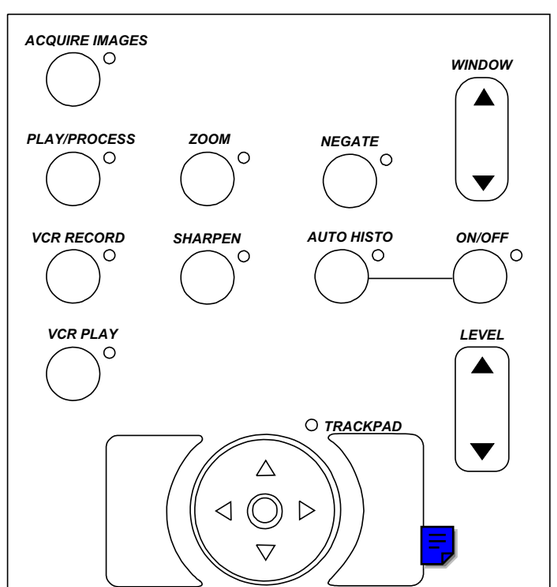

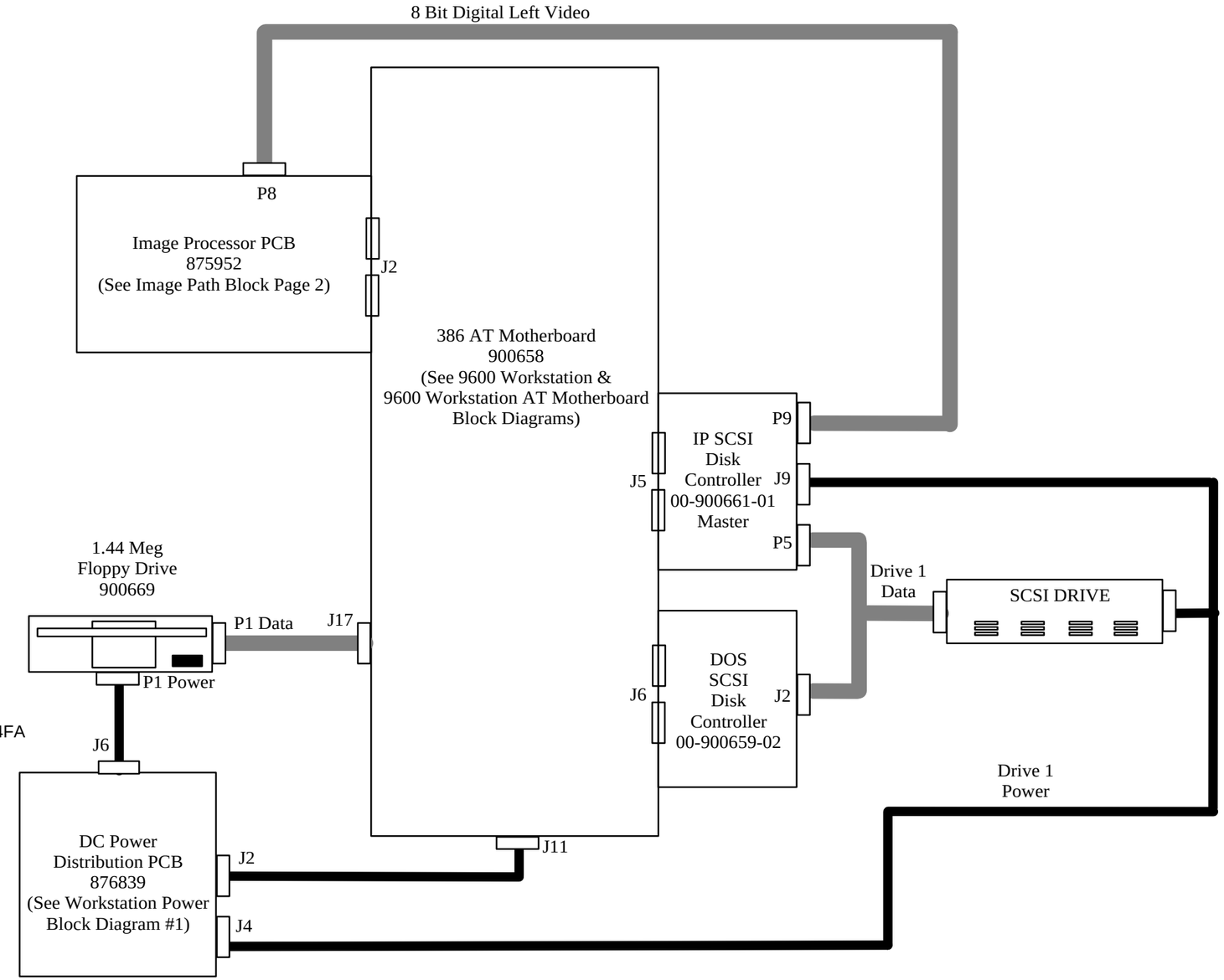

FRONT PANEL

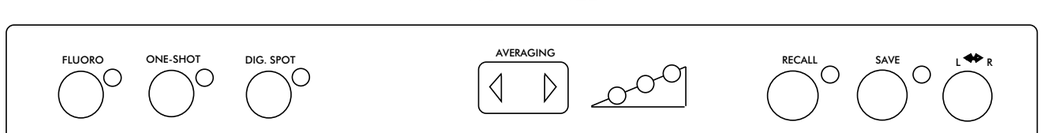

OEC MEDICAL SYSTEMS, INC Training	9600 C-ARM	
	For Reference Only	Page 1 of 6
	4&8_CINE.DS4	11/13/96

9600 WORKSTATION CONFIGURATIONS
ESP/4, ESP/BVAS, VASC/4 - (4 & 8 FPS) OPTIONS
ESP/4 HARDWARE & SOFTWARE CONFIGURATION

SYSTEM CONFIGURATION

1. Press **"SETUP OPTIONS"** on the annotation keyboard
2. Install the service disk in the floppy drive at the rear of the Workstation
3. Select **"Access Level 2"** from the menu
4. Select **"System Configuration"** from the menu
5. Select **"Set System Configurations"** from the menu
6. Set the configuration by making selections from the following menu:

SET CONFIGURATION

Line Frequency (Hz):	60
System Model:	BVAS
Digital Spot Option:	Yes
Cine Disk:	ALTA8
Language:	ENGLISH
VCR1:	Sony
VCR2:	Sony
Digital Print:	No
Serial Number:	69-1107
Hospital Name:	OEC TRAINING
Mars Table:	DOMESTIC
Measurements:	NO
Date Format:	MM/DD/YYYY

Use the cursor arrows to select
Press [ENTER] to accept
Press [ESC] to exit

SOFTWARE VERSION	FORMATTED HARD DISK PART #	DOS SCSI DISK CONTROLLER PART #	IP-SCSI DISK CONTROLLER PART #	AT COMM. PCB OPTION PROM (U25)	DRIVE PARTIONING
10	00-877025-01	00-900659-02 ADAPTEC	00-900661-01	-02	C: DRIVE 10M D: DRIVE 30M
11	00-877025-02	00-900659-02 ADAPTEC	00-900661-01	-03	C: DRIVE 10M D: DRIVE 60M

NOTES

Drives used: Fujitsu M2684SAU, M2623FA, or M2624FA
Seagate ST3550N or ST5660N
Hitachi DK325C-57

See pages 5 & 6 for hard drive jumper settings.

AT COMMUNICATIONS BOARD DISK DRIVE SELECTION JUMPERS E1-E3 FOR SCSI DISKS

SYSTEM TYPE MOTHERBOARD & DISK	E1	E2	E3
386 (AMI BIOS) WITH SCSI DISK	G	+	G

See also 9600 Workstation Motherboard Block Diagram

TRACKPAD PANEL

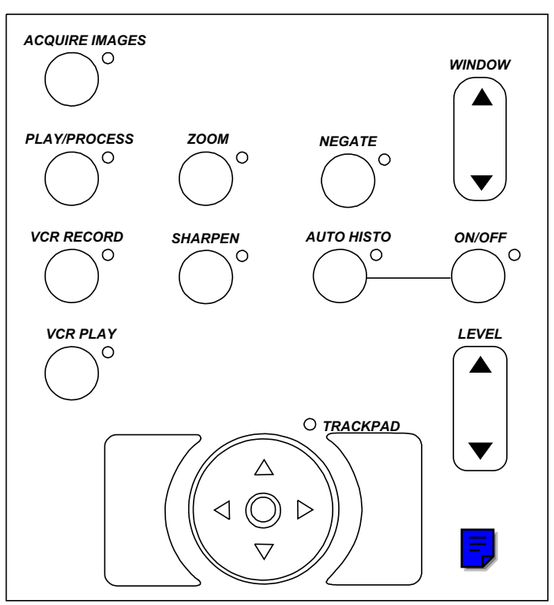

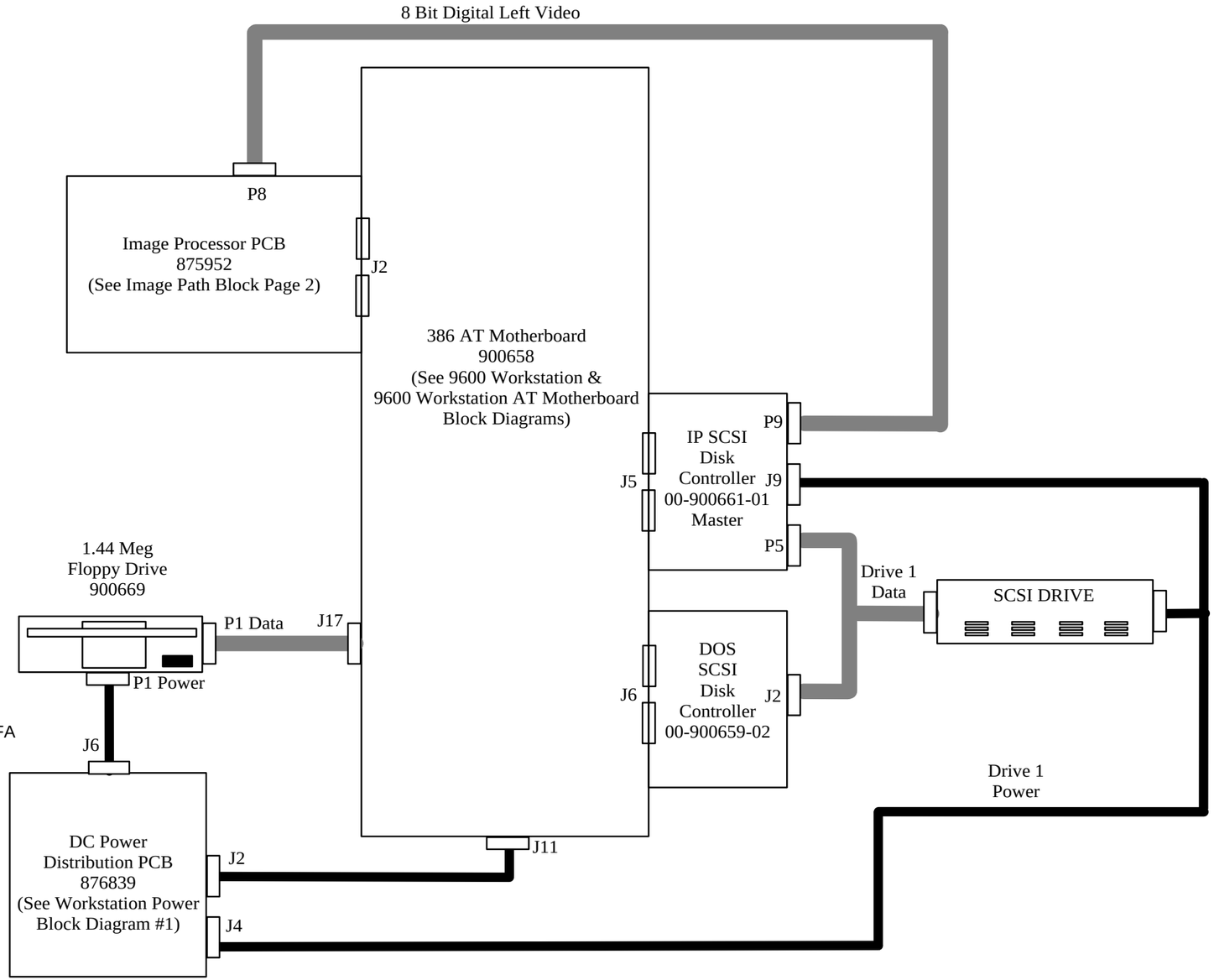

FRONT PANEL

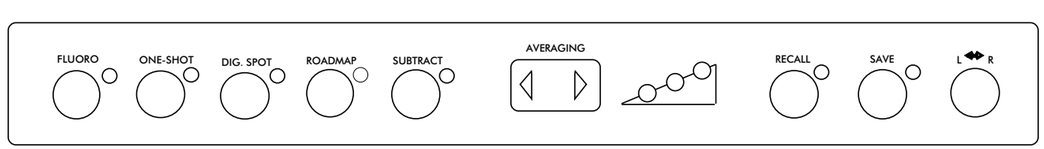

OEC MEDICAL SYSTEMS, INC Training	9600 C-ARM	
	For Reference Only	Page 2 of 6
	4&8_CINE.DS4	11/13/96

9600 WORKSTATION CONFIGURATIONS
ESP/4, ESP/BVAS, VASC/4 - (4 & 8 FPS) OPTIONS
ESP/BVAS HARDWARE & SOFTWARE CONFIG.

SYSTEM CONFIGURATION

1. Press **"SETUP OPTIONS"** on the annotation keyboard
2. Install the service disk in the floppy drive at the rear of the Workstation
3. Select **"Access Level 2"** from the menu
4. Select **"System Configuration"** from the menu
5. Select **"Set System Configurations"** from the menu
6. Set the configuration by making selections from the following menu:

SET CONFIGURATION

Line Frequency (Hz):	60
System Model:	VAS
Digital Spot Option:	Yes
Cine Disk:	ALTA4
Language:	ENGLISH
VCR1:	Sony
VCR2:	Sony
Digital Print:	No
Serial Number:	69-1107
Hospital Name:	OEC TRAINING
Mars Table:	DOMESTIC
Measurements:	NO
Date Format:	MM/DD/YYYY

Use the cursor arrows to select
Press [ENTER] to accept
Press [ESC] to exit

SOFTWARE VERSION	FORMATTED HARD DISK PART #	DOS SCSI DISK CONTROLLER PART #	IP-SCSI DISK CONTROLLER PART #	AT COMM. PCB OPTION PROM (U25)	DRIVE PARTIONING
10	00-877025-01	00-900659-02 ADAPTEC	00-900661-01	-02	C: DRIVE 10M D: DRIVE 30M
11	00-877025-02	00-900659-02 ADAPTEC	00-900661-01	-03	C: DRIVE 10M D: DRIVE 60M

NOTES

Drives used: Fujitsu M2684SAU, M2623FA, or M2624FA
Seagate ST3550N or ST5660N
Hitachi DK325C-57

See pages 5 & 6 for hard drive jumper settings.

AT COMMUNICATIONS BOARD DISK DRIVE SELECTION JUMPERS E1-E3 FOR SCSI DISKS

SYSTEM TYPE MOTHERBOARD & DISK	E1	E2	E3
386 (AMI BIOS) WITH SCSI DISK	G	+	G

See also 9600 Workstation Motherboard Block Diagram

TRACKPAD PANEL

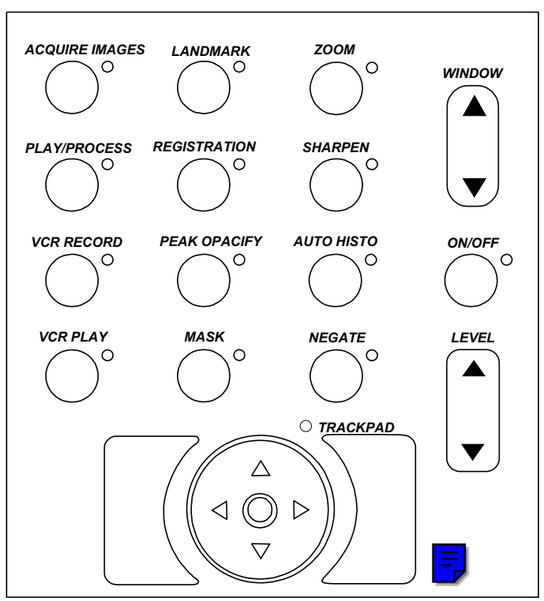

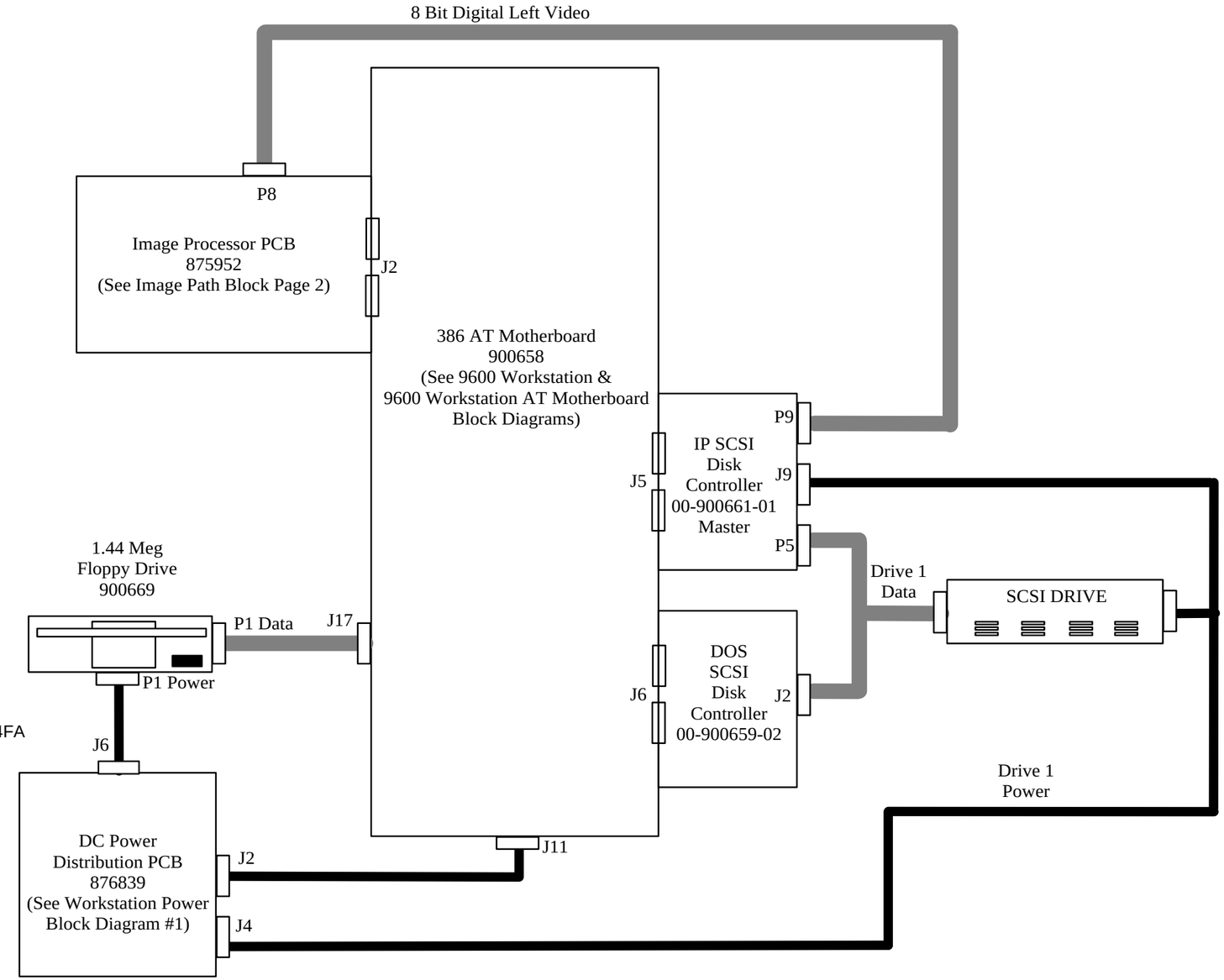

FRONT PANEL

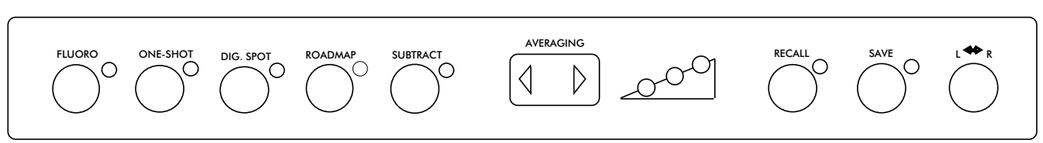

OEC MEDICAL SYSTEMS, INC Training	**9600 C-ARM**	
	For Reference Only	Page 3 of 6
	4&8_CINE.DS4	11/13/96

9600 WORKSTATION CONFIGURATIONS
ESP/4, ESP/BVAS, VASC/4 - (4 & 8 FPS) OPTIONS
VASC/4 HARDWARE & SOFTWARE CONFIGURATION

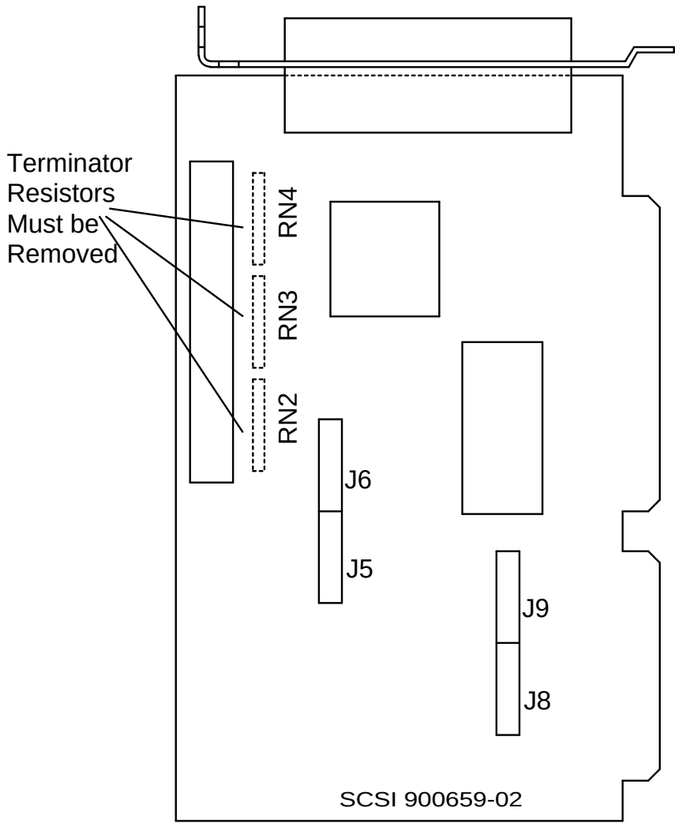

JUMPER SETTING							
O=OPEN S=SHORT							
J5-1	O	J6-1	S	J8-1	O	J9-1	O
J5-2	O	J6-2	S	J8-2	O	J9-2	O
J5-3	O	J6-3	S	J8-3	O	J9-3	O
J5-4	O	J6-4	O	J8-4	O	J9-4	S
J5-5	S	J6-5	O	J8-5	O	J9-5	O
J5-6	S	J6-6	O	J8-6	O	J9-6	S
J5-7	O	J6-7	O	J8-7	O	J9-7	S
J5-8	O	J6-8	O	J8-8	O	J9-8	S

ADAPTEC
4 & 8 FPS CINE OPTIONS

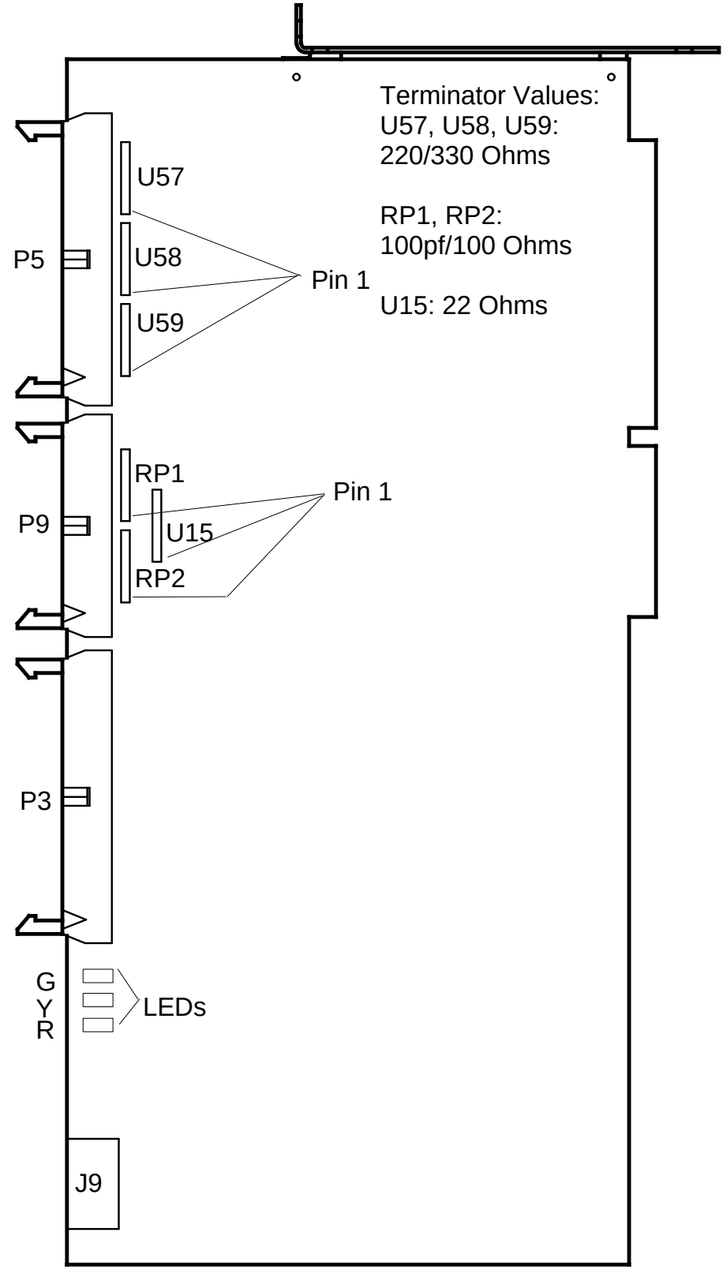

IP SCSI CONTROLLER - MASTER (4/8/15/30 FPS)

SCSI Troubleshooting Notes

Boot-up Problems
1. If the system Application software boots up, the DOS SCSI Disk Controller PCB is probably OK. Otherwise, remove the IP SCSI Disk Controller PCBs and reboot. If this caused the system to not boot, replace this board.
2. Try booting with the diagnostic disk in the A:\ drive. If this is successful, you need to replace the DOS SCSI Disk Controller PCB or the Hard Disk Drive.

CINE LOOP Problems
1. Examine the green, yellow and red LEDs on the IP-SCSI Disk Controller PCB. After boot-up, use the table below to determine the probable cause of failure.
2. If only the cine loop is not working, try deleting the Header.Dat file on the C:\ drive BUT YOU WILL LOOSE ALL PREVIOUS CINE RUNS AND ALL 200 PATIENT IMAGES. Reboot the system and verify operation. See also Formatting the Cine Partition.
3. Try replacing the IP-SCSI Disk Controller PCBs.

Formatting the Cine Partition.
1. With the cart powered on, insert the diag. disk & press SETUP OPTIONS, Select Access Level 2.
2. Select "Prepare CINE Disk"
3. Reboot the system and verify operation.

IP SCSI Disk Controller Status LEDs

G	Y	R	
off	**on**	**off**	**= Normal Condition**
on	on	off	= IP-SCSI Failure
on	off	on	= IP-SCSI Failure
on	on	on	= IP-SCSI Failure
on	off	on	= IP-SCSI Failure
off	on	on	= SCSI HDD Failure

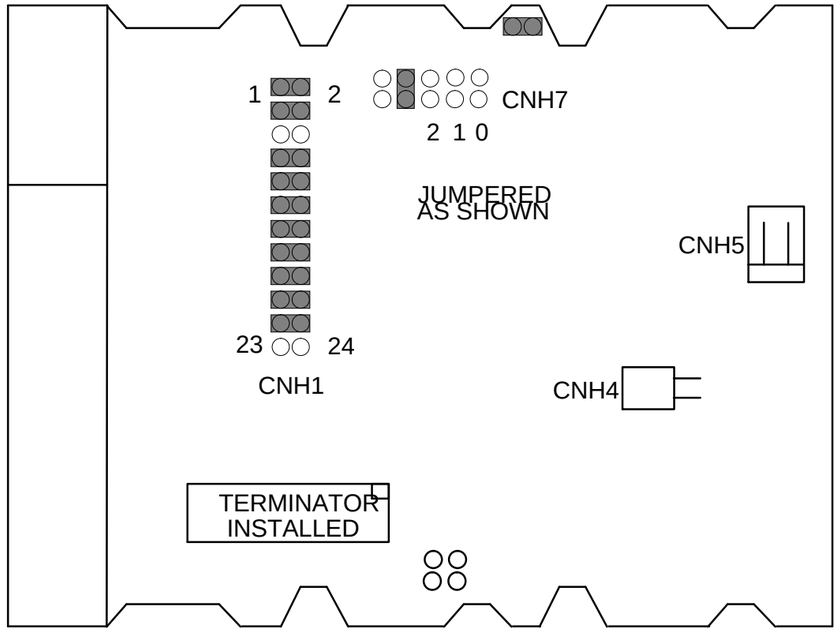

FUJITSU M2623FA AND M2624FA

JUMPER AS ILLUSTRATED

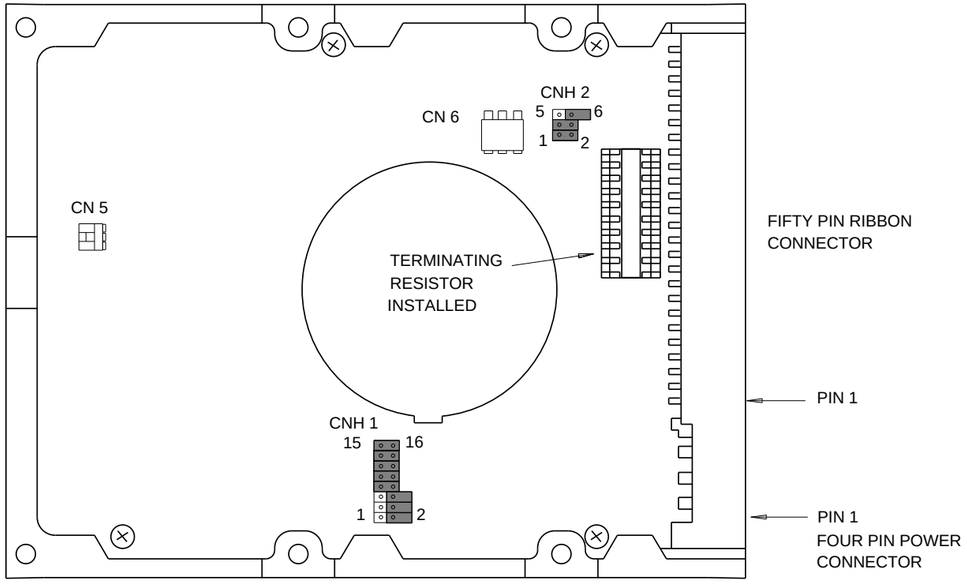

FUJITSU M2684SAU

JUMPER AS ILLUSTRATED

OEC MEDICAL SYSTEMS, INC Training	9600 C-ARM	
	For Reference Only	Page 5 of 6
	4&8_CINE.DS4	11/13/96

9600 WORKSTATION CONFIGURATIONS

ESP/4, ESP/BVAS, VASC/4 - (4 & 8 FPS) OPTIONS

FUJITSU SCSI DISK JUMPER SETTINGS

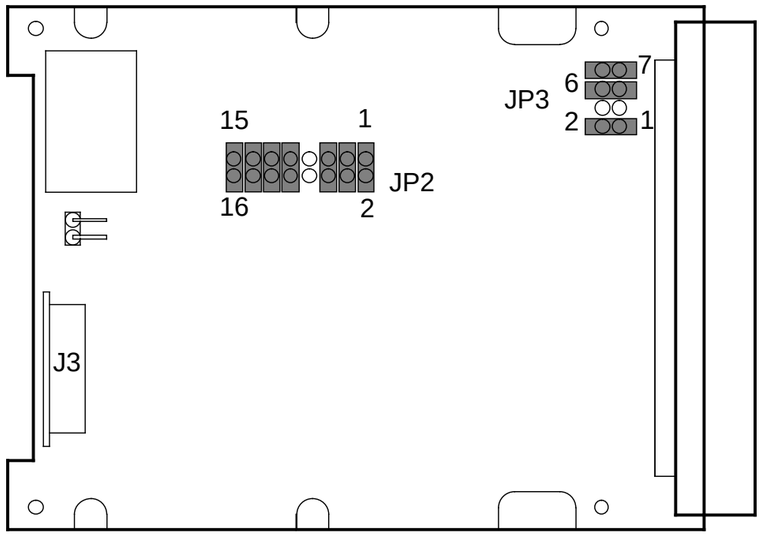

BOTTOM VIEW

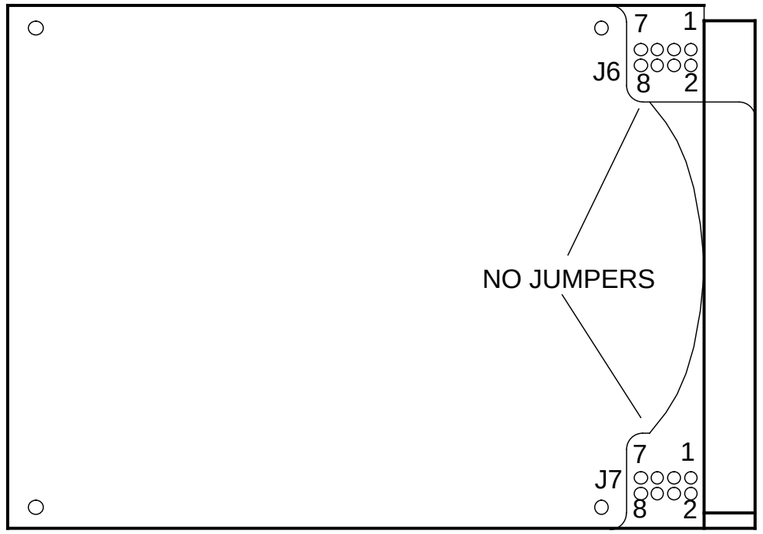

TOP VIEW

HITACHI DK325C-57

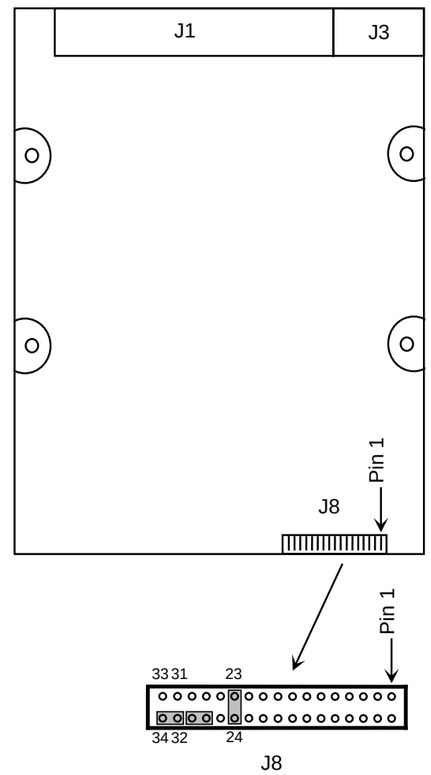

SEAGATE ST5660N

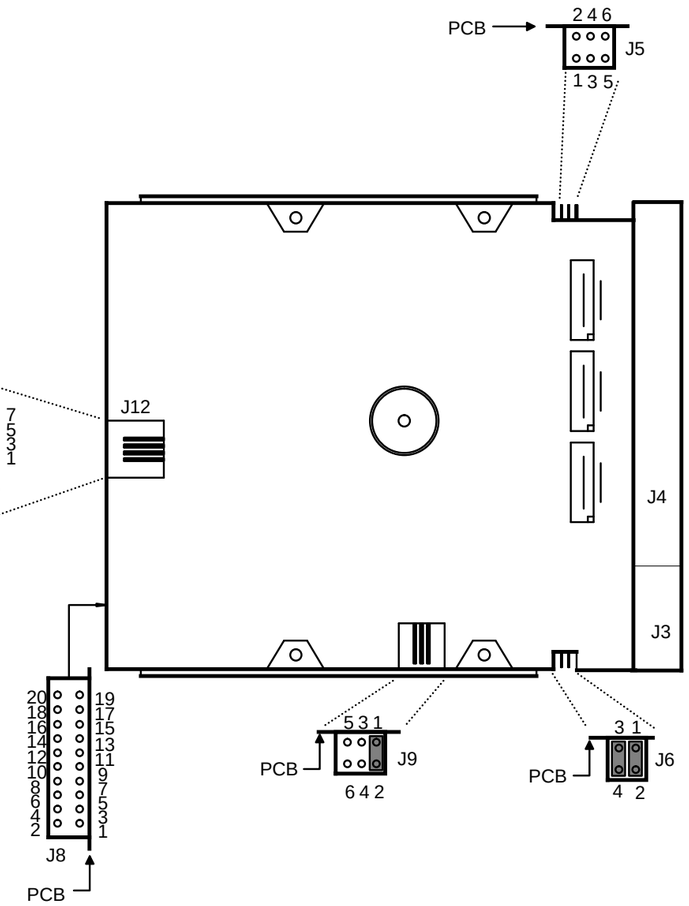

SEAGATE ST3550N

OEC MEDICAL SYSTEMS, INC Training	**9600 C-ARM**	
	For Reference Only	Page 6 of 6
	4&8_CINE.DS4	11/13/96

9600 WORKSTATION CONFIGURATIONS

ESP/4, ESP/BVAS, VASC/4 - (4 & 8 FPS) OPTIONS

HITACHI & SEAGATE SCSI DISK JUMPER SETTINGS

SYSTEM CONFIGURATION

1. Press **"SETUP OPTIONS**" on the annotation keyboard
2. Install the service disk in the floppy drive at the rear of the Workstation
3. Select **"Access Level 2"** from the menu
4. Select **"System Configuration"** from the menu
5. Select **"Set System Configurations"** from the menu
6. Set the configuration by making selections from the following menu:

SET CONFIGURATION

Line Frequency (Hz):	60
System Model:	ESP
Digital Spot Option:	Yes
Cine Disk:	ALTA15
Language:	ENGLISH
VCR1:	Sony
VCR2:	Sony
Digital Print:	No
Serial Number:	69-1107
Hospital Name:	OEC TRAINING
Mars Table:	DOMESTIC
Measurements:	NO
Date Format:	MM/DD/YYYY

Use the cursor arrows to select
Press [ENTER] to accept
Press [ESC] to exit

SOFTWARE VERSION	FORMATTED HARD DISK PART #	DOS SCSI DISK CONTROLLER PART #	IP-SCSI DISK CONTROLLER PART #	AT COMM. PCB OPTION PROM (U25)	DRIVE PARTIONING
10	00-878230-01	00-900659-04 Q Logic	00-900661-01	-02	C: DRIVE 10M D: DRIVE 30M
11	00-878230-02	00-900659-04 Q Logic	00-900661-01	-03	C: DRIVE 10M D: DRIVE 60M

NOTES

Drives used: Fujitsu M2932SAU
Seagate ST11950N, ST12550N, or ST32550N
Micropolis 4221

See page 4 for hard drive jumper settings.

AT COMMUNICATIONS BOARD DISK DRIVE SELECTION JUMPERS E1-E3 FOR SCSI DISKS

SYSTEM TYPE MOTHERBOARD & DISK	E1	E2	E3
386 (AMI BIOS) WITH SCSI DISK	G	+	G

See also 9600 Workstation Motherboard Block Diagram

TRACKPAD PANEL

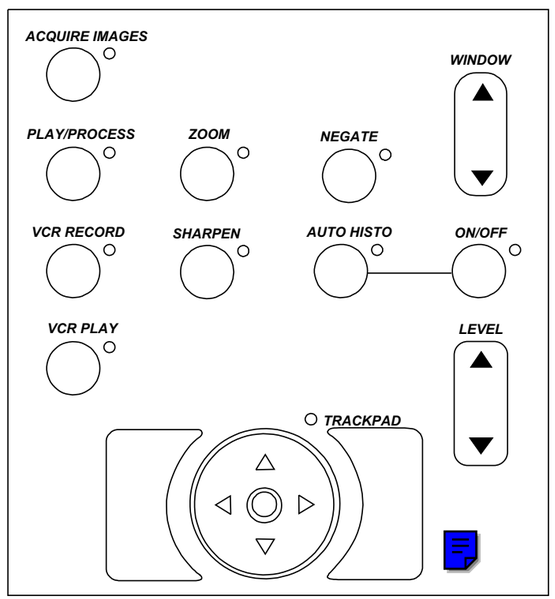

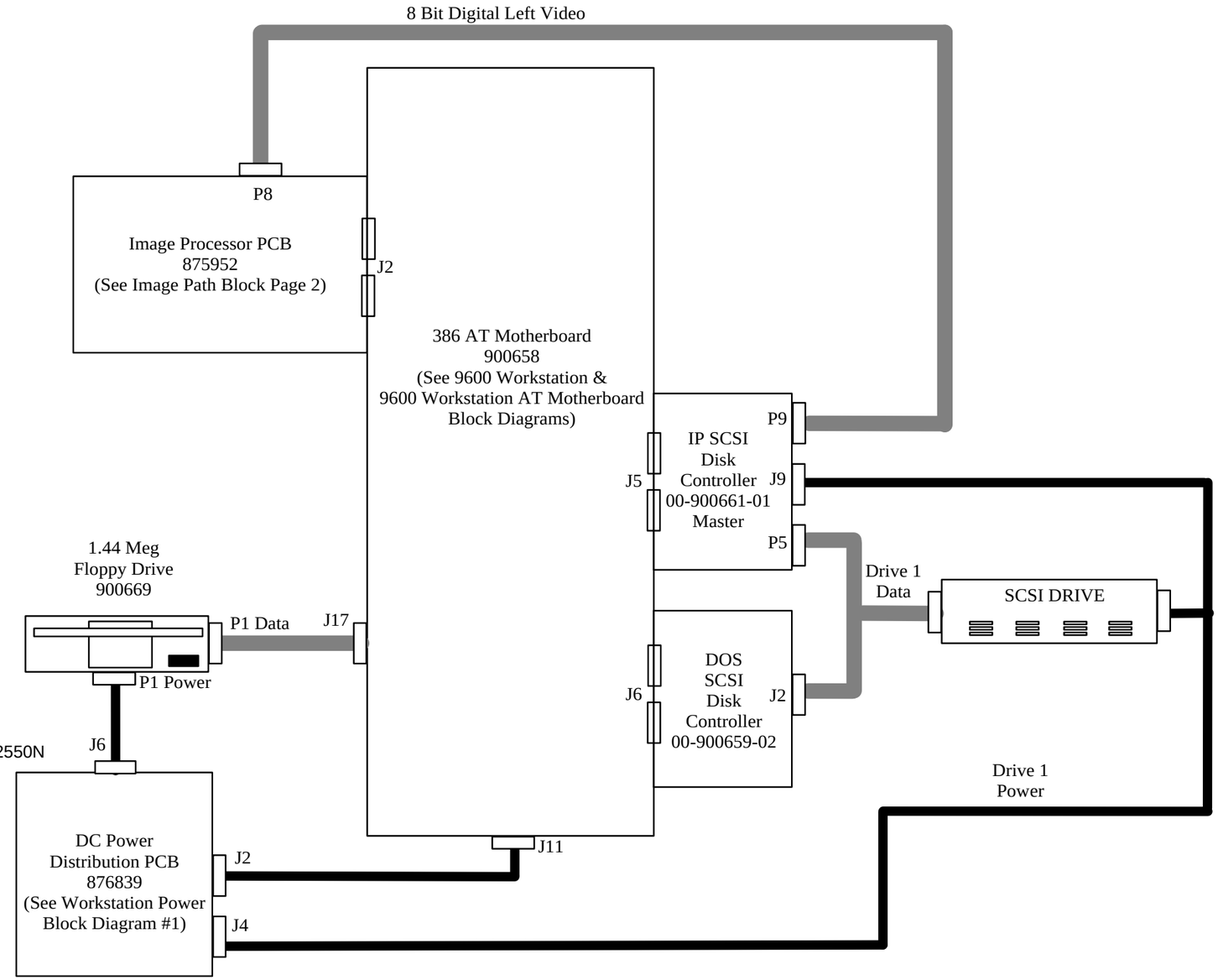

FRONT PANEL

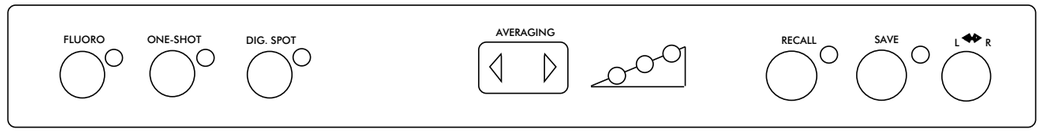

OEC MEDICAL SYSTEMS, INC Training	**9600 C-ARM**	
	For Reference Only	Page 1 of 4
	15_CINE.DS4	11/13/96

9600 WORKSTATION CONFIGURATIONS
ESP/15, VASC/15 - (15 FPS) OPTIONS
ESP/15 HARDWARE & SOFTWARE CONFIGURATION

SYSTEM CONFIGURATION

1. Press **"SETUP OPTIONS"** on the annotation keyboard
2. Install the service disk in the floppy drive at the rear of the Workstation
3. Select **"Access Level 2"** from the menu
4. Select **"System Configuration"** from the menu
5. Select **"Set System Configurations"** from the menu
6. Set the configuration by making selections from the following menu:

SET CONFIGURATION

Line Frequency (Hz):	60
System Model:	VAS
Digital Spot Option:	Yes
Cine Disk:	ALTA15
Language:	ENGLISH
VCR1:	Sony
VCR2:	Sony
Digital Print:	No
Serial Number:	69-1107
Hospital Name:	OEC TRAINING
Mars Table:	DOMESTIC
Measurements:	NO
Date Format:	MM/DD/YYYY

Use the cursor arrows to select
Press [ENTER] to accept
Press [ESC] to exit

SOFTWARE VERSION	FORMATTED HARD DISK PART #	DOS SCSI DISK CONTROLLER PART #	IP-SCSI DISK CONTROLLER PART #	AT COMM. PCB OPTION PROM (U25)	DRIVE PARTIONING
10	00-878230-01	00-900659-04 Q Logic	00-900661-01	-02	C: DRIVE 10M D: DRIVE 30M
11	00-878230-02	00-900659-04 Q Logic	00-900661-01	-03	C: DRIVE 10M D: DRIVE 60M

NOTES

Drives used: Fujitsu M2932SAU
Seagate ST11950N, ST12550N, or ST32550N
Micropolis 4221

See page 4 for hard drive jumper settings.

AT COMMUNICATIONS BOARD DISK DRIVE SELECTION JUMPERS E1-E3 FOR SCSI DISKS

SYSTEM TYPE MOTHERBOARD & DISK	E1	E2	E3
386 (AMI BIOS) WITH SCSI DISK	G	+	G

See also 9600 Workstation Motherboard Block Diagram

TRACKPAD PANEL

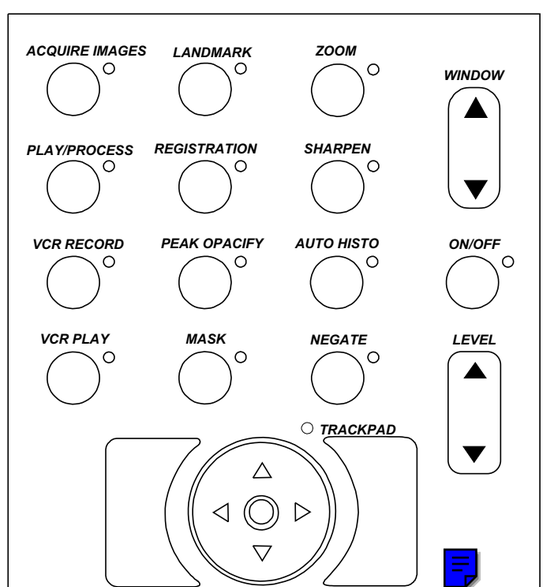

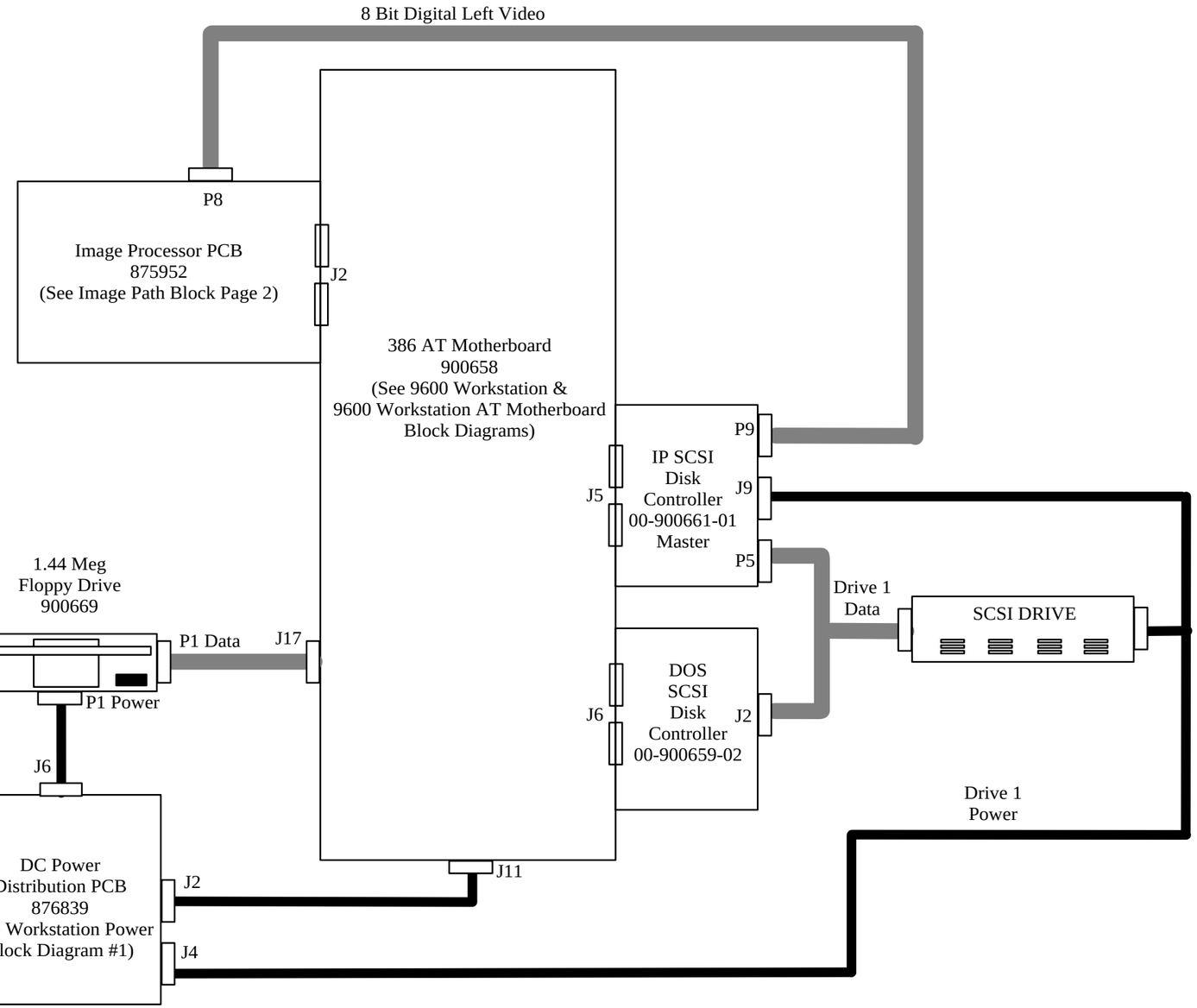

FRONT PANEL

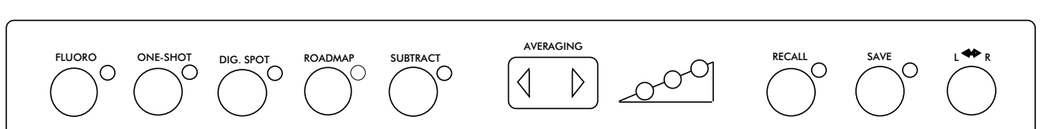

OEC MEDICAL SYSTEMS, INC Training	9600 C-ARM	
	For Reference Only	Page 2 of 4
	15_CINE.DS4	11/13/96

9600 WORKSTATION CONFIGURATIONS
ESP/15, VASC/15 - (15 FPS) OPTIONS
VASC/15 HARDWARE & SOFTWARE CONFIG.

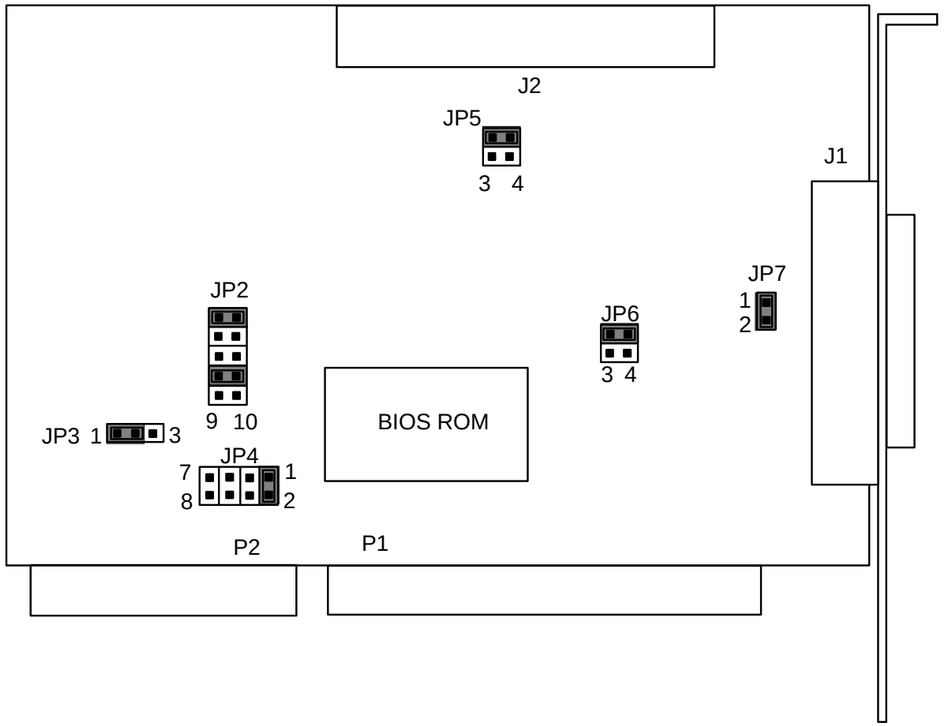

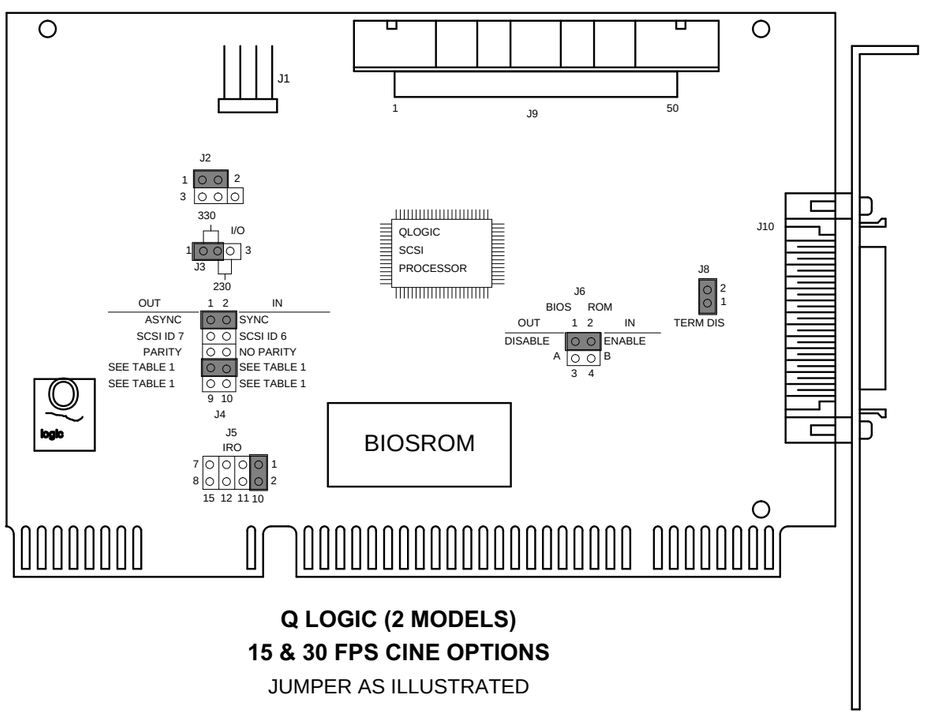

Q LOGIC (2 MODELS)
15 & 30 FPS CINE OPTIONS
JUMPER AS ILLUSTRATED

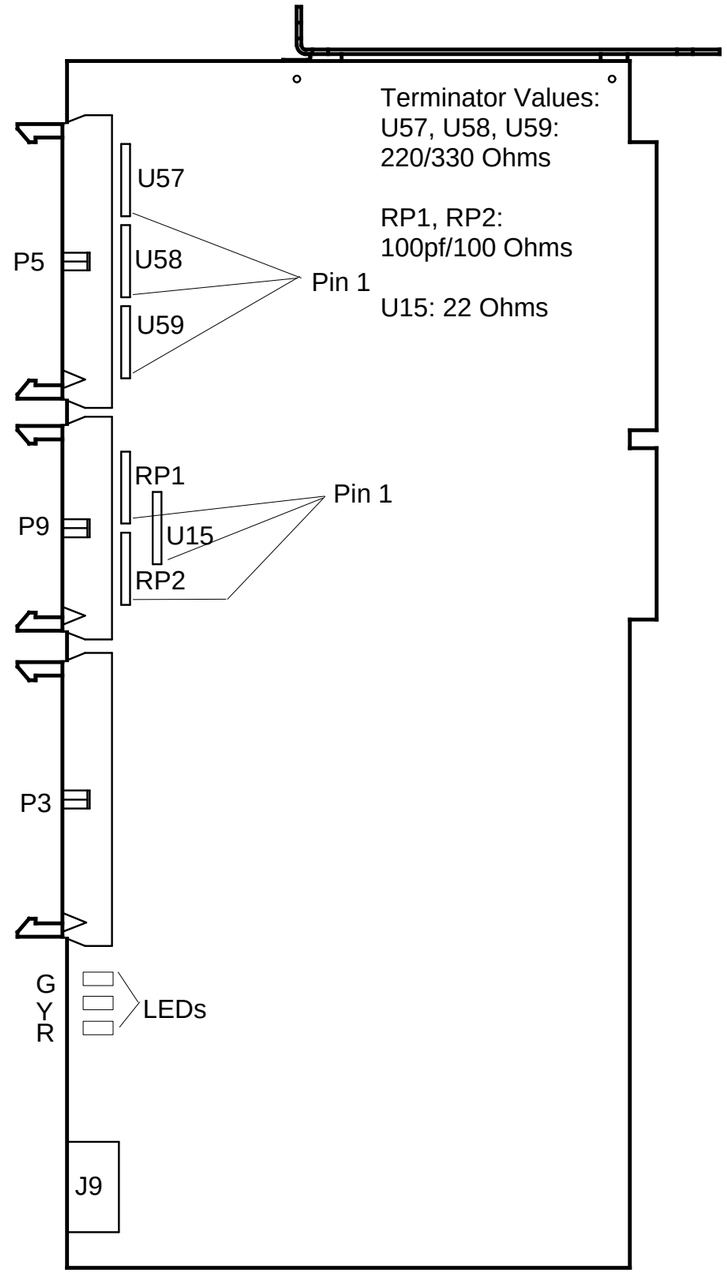

IP SCSI CONTROLLER - MASTER (4/8/15/30 FPS)

SCSI Troubleshooting Notes

Boot-up Problems
1. If the system Application software boots up,
the DOS SCSI Disk Controller PCB is probably OK.
Otherwise, remove the IP SCSI Disk Controller PCBs and reboot.
If this caused the system to not boot, replace this board.
2. Try booting with the diagnostic disk in the A:\ drive.
If this is successful, you need to replace the
DOS SCSI Disk Controller PCB or the Hard Disk Drive.

CINE LOOP Problems
1. Examine the green, yellow and red LEDs on the
IP-SCSI Disk Controller PCB. After boot-up,
use the table below to determine the probable cause of failure.
2. If only the cine loop is not working, try deleting the Header.Dat
file on the C:\ drive BUT YOU WILL LOOSE ALL PREVIOUS
CINE RUNS AND ALL 200 PATIENT IMAGES.
Reboot the system and verify operation.
See also Formatting the Cine Partition.
3. Try replacing the IP-SCSI Disk Controller PCBs.

Formatting the Cine Partition.
1. With the cart powered on, insert the diag. disk & press
SETUP OPTIONS, Select Access Level 2.
2. Select "Prepare CINE Disk"
3. Reboot the system and verify operation.

IP SCSI Disk Controller Status LEDs

G	Y	R	
off	**on**	**off**	**= Normal Condition**
on	on	off	= IP-SCSI Failure
on	off	on	= IP-SCSI Failure
on	on	on	= IP-SCSI Failure
on	off	on	= IP-SCSI Failure
off	on	on	= SCSI HDD Failure

OEC OF CMEDICAL SYSTEMS, INC Training	**9600 C-ARM**	
	For Reference Only	Page 3 of 4
	15_CINE.DS4	11/13/96

9600 WORKSTATION CONFIGURATIONS
ESP/15, VASC/15 - (15 FPS) OPTIONS
DOS SCSI & IP-SCSI DISK CONTROLLER CONFIG.

MICROPOLIS 4221

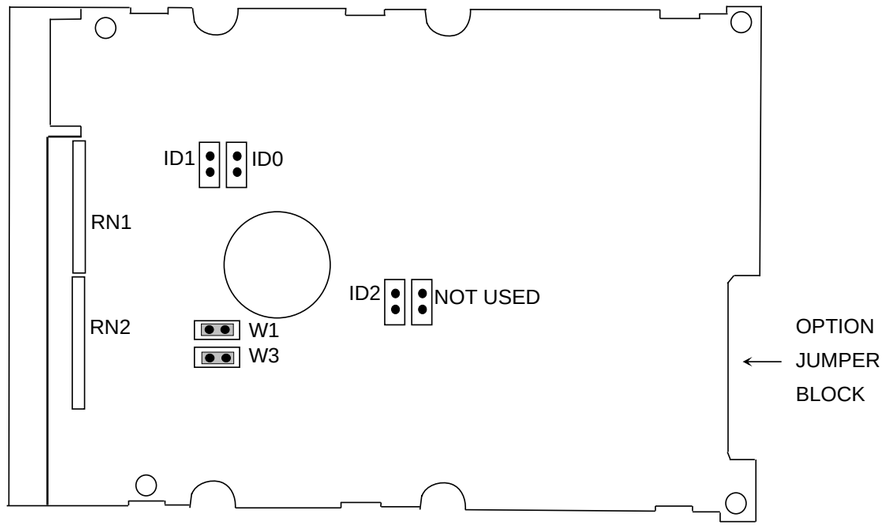

OEC JUMPERS

NO JUMPERS ON OPTI0N JUMPER BLOCK

NO JUMPERS ON ID0, ID1OR ID2

JUMPER W1 & W3

W1
W3

RN1 AND RN2 INSTALLED

FUJITSU M2932SAU

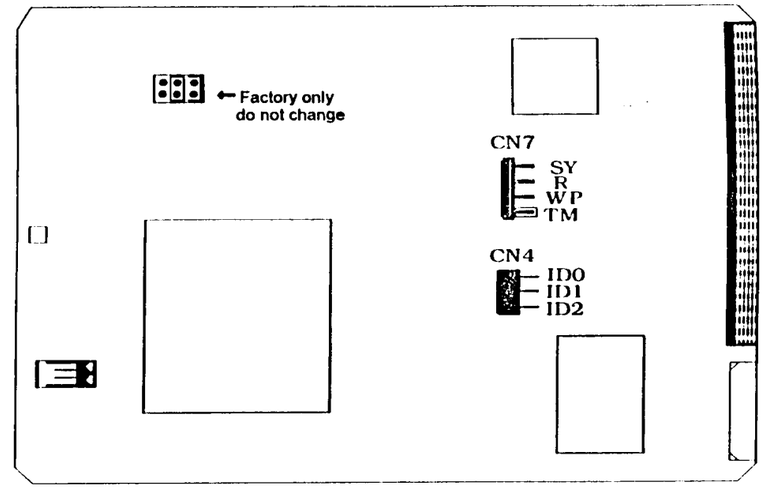

OEC JUMPERS

CN6:	D (INTERNAL DIAGNOSTIC)	OFF
	P (PARITY SETTING)	ON
	A (AUTOMATIC MOTOR START)	ON
CN4:	ID0 OFF	
	ID1 OFF	
	ID2 OFF	
CN7:	SY (SPINDLE SYNC SIGNAL)	OFF
	R (DISK DRIVE RESET)	OFF
	WP (WRITE PROTECT)	OFF
	TM (TERMINATION)	ON

SEAGATE ST32550N

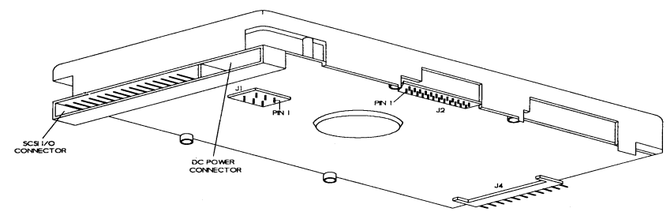

OEC JUMPERS

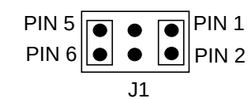

JUMPER PINS 1 & 2 (TERMINATE POWER FROM DRIVE)

JUMPER PINS 5 & 6 (ENABLE SCSI TERMINATION)

NO JUMPERS ON J2 & J4

SEAGATE ST11950N AND ST12550N

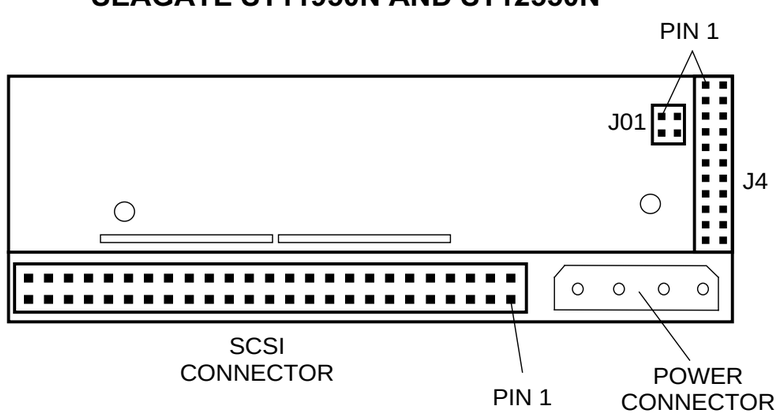

OEC JUMPERS

J4 - NO JUMPERS INSTALLED

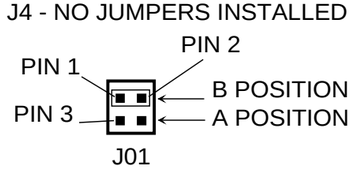

TERM. POWER FROM DRIVE:

OEC MEDICAL SYSTEMS, INC Training	9600 C-ARM	
	For Reference Only	Page 4 of 4
	15_CINE.DS4	11/13/96

9600 WORKSTATION CONFIGURATIONS

ESP/15, VASC/15 - (15 FPS) OPTIONS

SCSI DISK JUMPER SETTINGS

SYSTEM CONFIGURATION

1. Press **"SETUP OPTIONS"** on the annotation keyboard
2. Install the service disk in the floppy drive at the rear of the Workstation
3. Select **"Access Level 2"** from the menu
4. Select **"System Configuration"** from the menu
5. Select **"Set System Configurations"** from the menu
6. Set the configuration by making selections from the following menu:

SET CONFIGURATION

Line Frequency (Hz):	60
System Model:	VAS
Digital Spot Option:	Yes
Cine Disk:	ALTA30
Language:	ENGLISH
VCR1:	Sony
VCR2:	Sony
Digital Print:	No
Serial Number:	69-1107
Hospital Name:	OEC TRAINING
Mars Table:	DOMESTIC
Measurements:	NO
Date Format:	MM/DD/YYYY

Use the cursor arrows to select
Press [ENTER] to accept
Press [ESC] to exit

SOFTWARE VERSION	FORMATTED HARD DISK PART # 2 REQUIRED	DOS SCSI DISK CONTROLLER PART #	IP-SCSI DISK CONTROLLER PART # 2 REQUIRED 1 MASTER&1SLAVE	AT COMM. PCB OPTION PROM (U25)	DRIVE PARTIONING
10	00-878230-01	00-900659-04 Q Logic	00-900661-01	-02	C: DRIVE 10M D: DRIVE 30M
11	00-878230-02	00-900659-04 Q Logic	00-900661-01	-03	C: DRIVE 10M D: DRIVE 60M

NOTES

Drives used: Fujitsu M2932SAU
Seagate ST11950N, ST12550N, or ST32550N
Micropolis 4221

See page 4 for hard drive jumper settings.

AT COMMUNICATIONS BOARD DISK DRIVE SELECTION JUMPERS E1-E3 FOR SCSI DISKS

SYSTEM TYPE MOTHERBOARD & DISK	E1	E2	E3
386 (AMI BIOS) WITH SCSI DISK	G	+	G

See also 9600 Workstation Motherboard Block Diagram

TRACKPAD PANEL

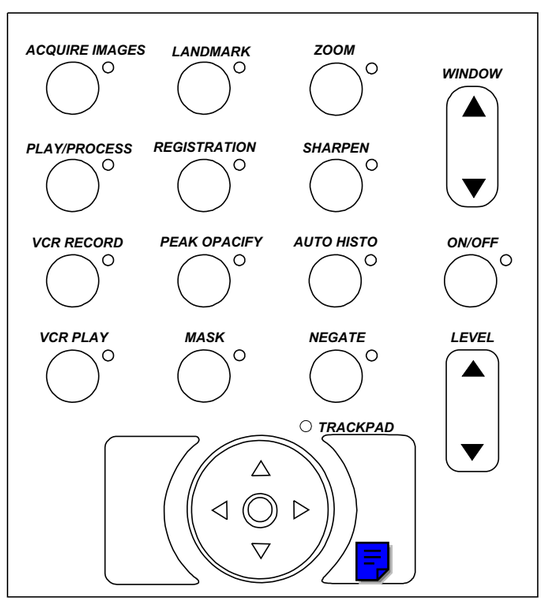

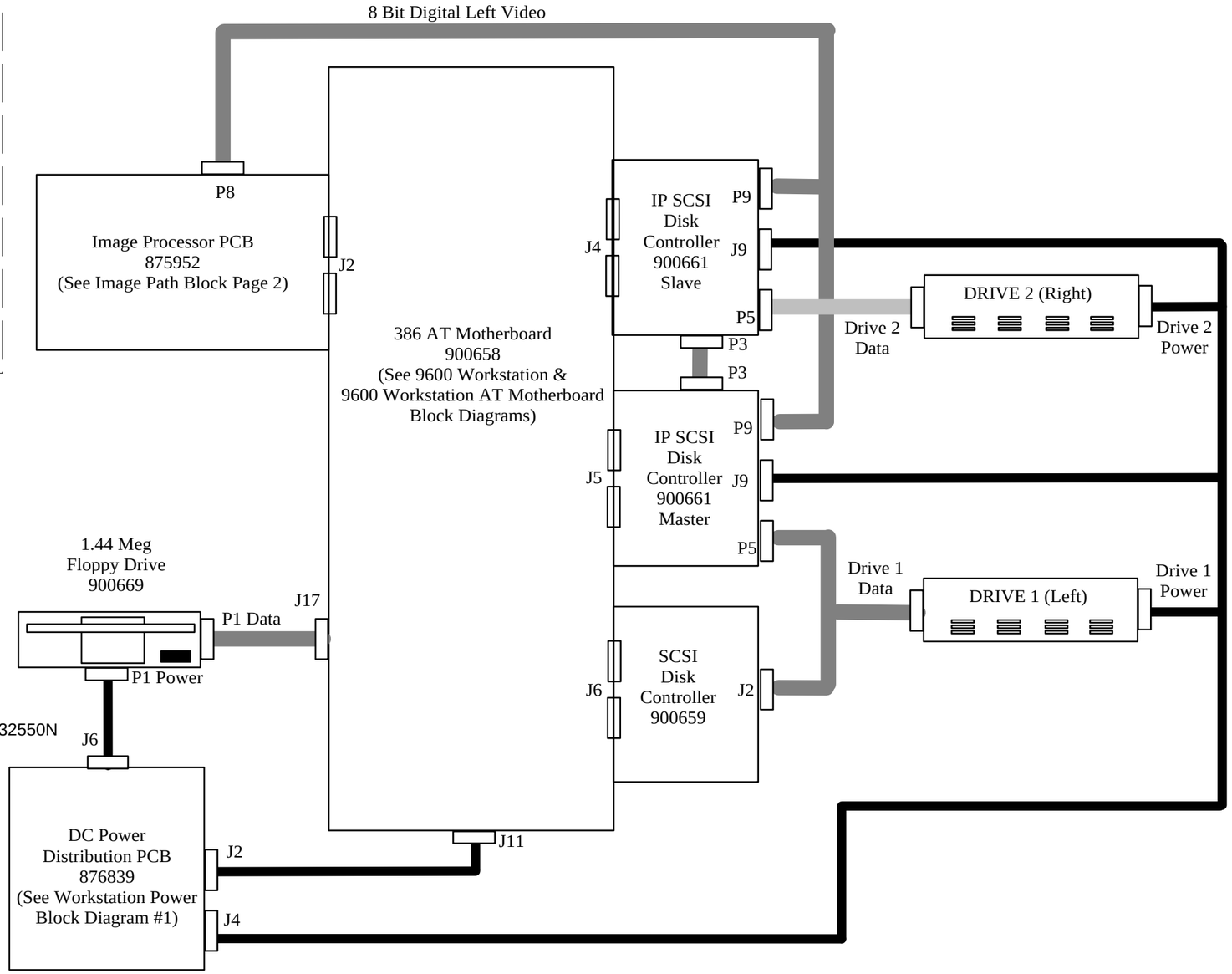

FRONT PANEL

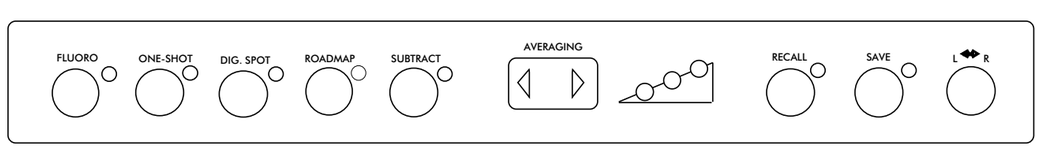

OEC MEDICAL SYSTEMS, INC
Training

9600 C-ARM

For Reference Only | Page 1 of 4
30_CINE.DS4 | 11/13/96

9600 WORKSTATION CONFIGURATIONS
VASCULAR WITH 30FPS CINE LOOP OPTION
HARDWARE & SOFTWARE CONFIGURATION

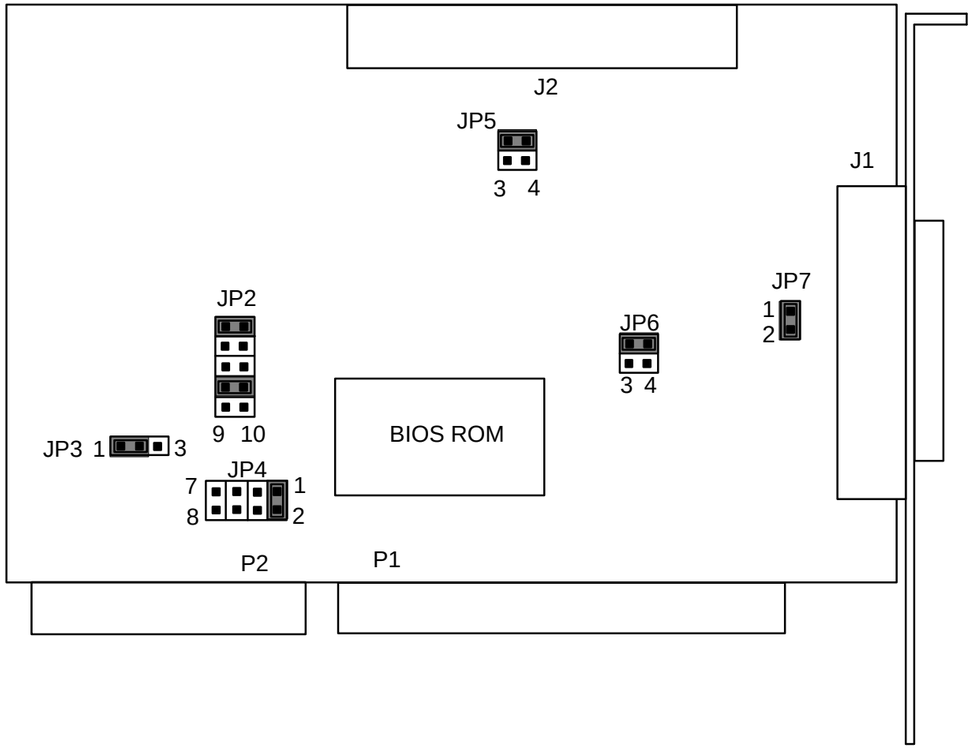

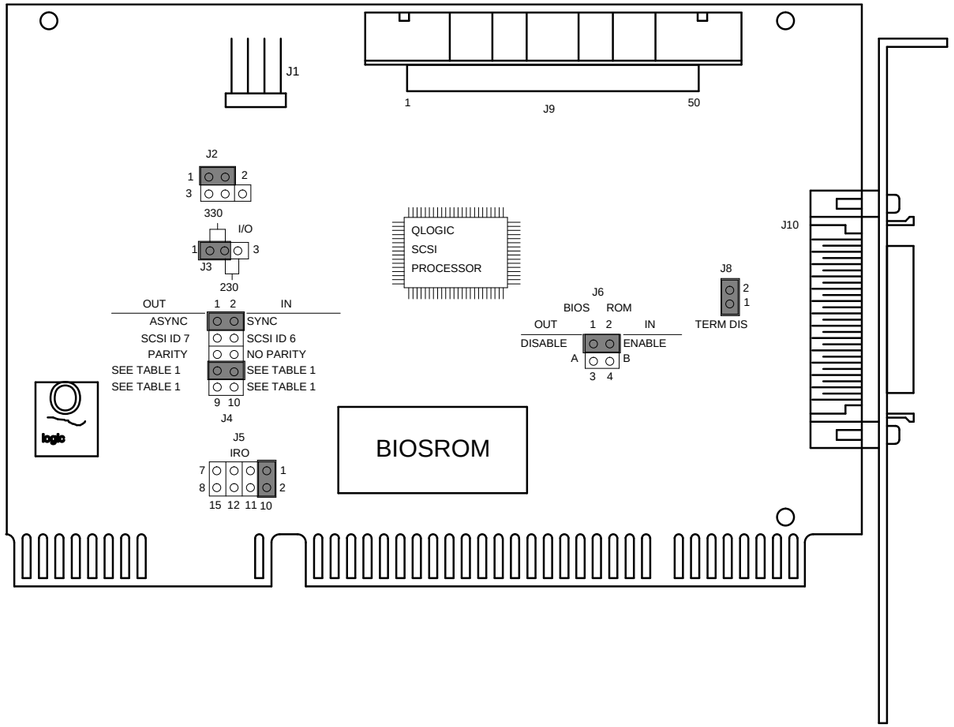

DOS SCSI CONTROLLERS

Q LOGIC (2 MODELS)
15 & 30 FPS CINE OPTIONS
JUMPER AS ILLUSTRATED

OEC MEDICAL SYSTEMS, INC Training	**9600 C-ARM**	
	For Reference Only	Page 2 of 4
	30_CINE.DS4	11/13/96

9600 WORKSTATION CONFIGURATIONS
VASCULAR WITH 30FPS CINE LOOP OPTION
DOS SCSI CONTROLLER CONFIGURATIONS

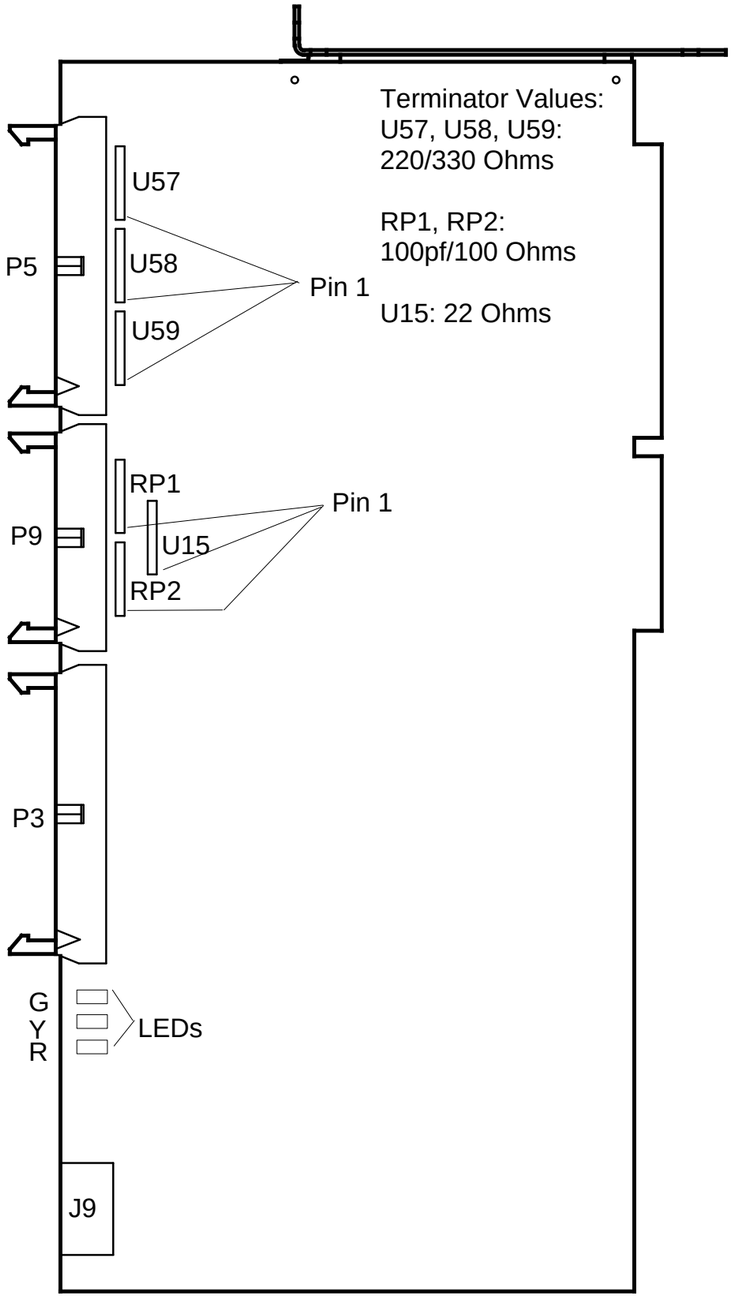

IP SCSI CONTROLLER - MASTER (4/8/15/30 FPS)

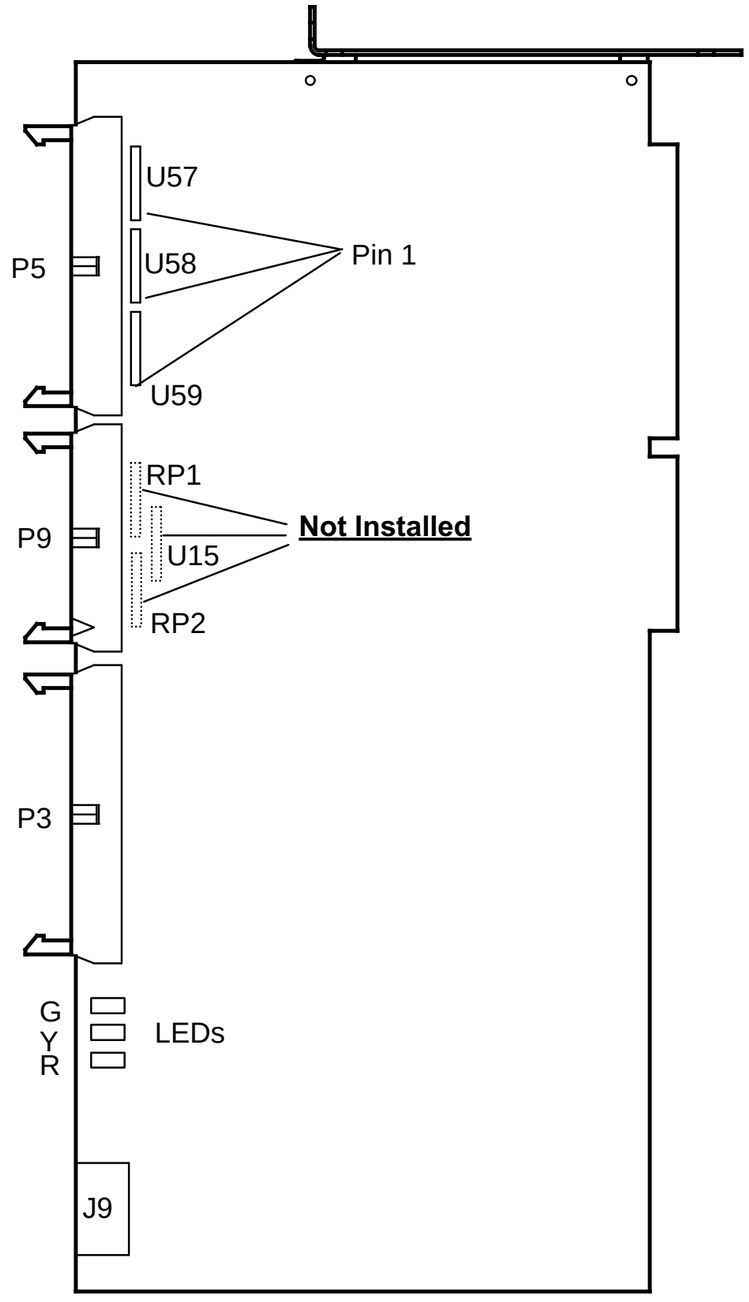

IP SCSI CONTROLLER - SLAVE (30FPS)

SCSI Troubleshooting Notes

Boot-up Problems
1. If the system Application software boots up, the DOS SCSI Disk Controller PCB is probably OK. Otherwise, remove the IP SCSI Disk Controller PCBs and reboot. If this caused the system to not boot, replace this board.
2. Try booting with the diagnostic disk in the A:\ drive. If this is successful, you need to replace the DOS SCSI Disk Controller PCB or the Hard Disk Drive.

CINE LOOP Problems
1. Examine the green, yellow and red LEDs on the IP-SCSI Disk Controller PCB. After boot-up, use the table below to determine the probable cause of failure.
2. If only the cine loop is not working, try deleting the Header.Dat file on the C:\ drive BUT YOU WILL LOOSE ALL PREVIOUS CINE RUNS AND ALL 200 PATIENT IMAGES. Reboot the system and verify operation. See also Formatting the Cine Partition.
3. Try replacing the IP-SCSI Disk Controller PCBs.

Formatting the Cine Partition.
1. With the cart powered on, insert the diag. disk & press SETUP OPTIONS, Select Access Level 2.
2. Select "Prepare CINE Disk"
3. Reboot the system and verify operation.

IP SCSI Disk Controller Status LEDs

G	Y	R	
off	**on**	**off**	**= Normal Condition**
on	on	off	= IP-SCSI Failure
on	off	on	= IP-SCSI Failure
on	on	on	= IP-SCSI Failure
on	off	on	= IP-SCSI Failure
off	on	on	= SCSI HDD Failure

OEC MEDICAL SYSTEMS, INC Training	9600 C-ARM	
	For Reference Only	Page 3 of 4
	30_CINE.DS4	11/13/96

9600 WORKSTATION CONFIGURATIONS
VASCULAR WITH 30FPS CINE LOOP OPTION
IP-SCSI CONTROLLER CONFIGURATIONS

MICROPOLIS 4221

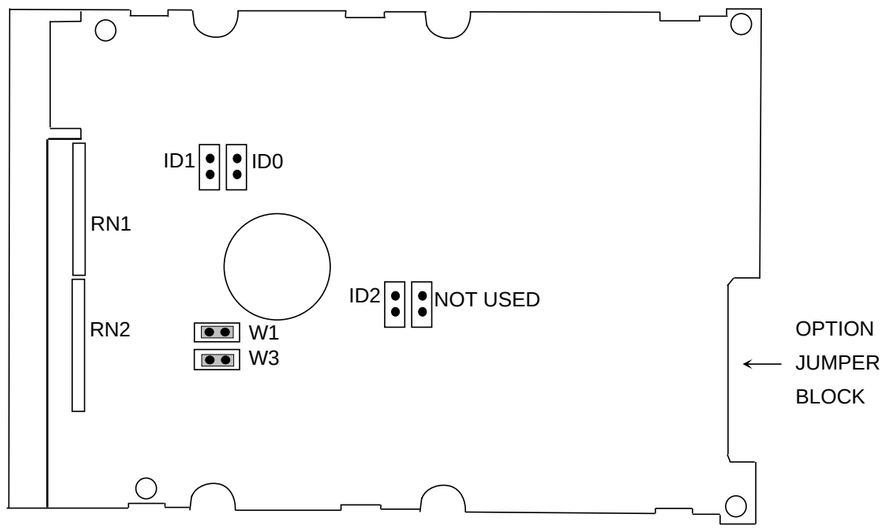

OEC JUMPERS

NO JUMPERS ON OPTI0N JUMPER BLOCK

NO JUMPERS ON ID0, ID1OR ID2

JUMPER W1 & W3

W1
W3

RN1 AND RN2 INSTALLED

FUJITSU M2932SAU

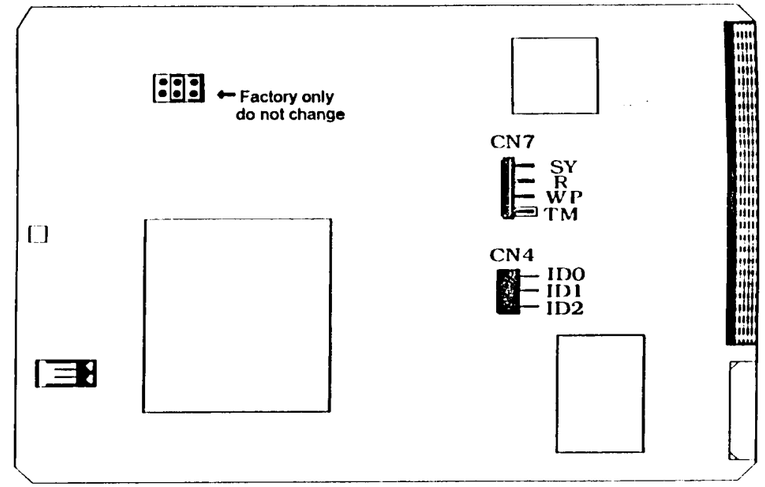

OEC JUMPERS

CN6:	D (INTERNAL DIAGNOSTIC)	OFF
	P (PARITY SETTING)	ON
	A (AUTOMATIC MOTOR START)	ON
CN4:	ID0 OFF	
	ID1 OFF	
	ID2 OFF	
CN7:	SY (SPINDLE SYNC SIGNAL)	OFF
	R (DISK DRIVE RESET)	OFF
	WP (WRITE PROTECT)	OFF
	TM (TERMINATION)	ON

SEAGATE ST32550N

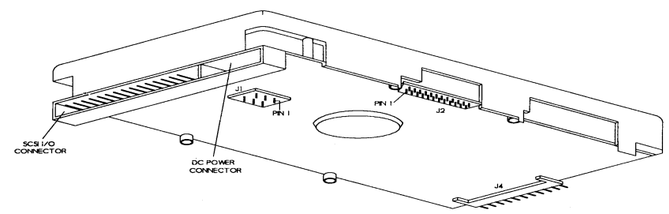

OEC JUMPERS

PIN 5 PIN 1
PIN 6 PIN 2

J1

JUMPER PINS 1 & 2 (TERMINATE POWER FROM DRIVE)

JUMPER PINS 5 & 6 (ENABLE SCSI TERMINATION)

NO JUMPERS ON J2 & J4

SEAGATE ST11950N AND ST12550N

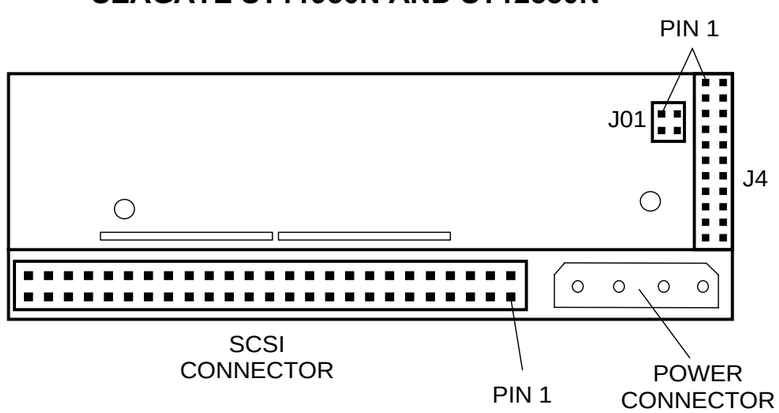

OEC JUMPERS

J4 - NO JUMPERS INSTALLED

PIN 2
PIN 1
B POSITION
PIN 3
A POSITION
J01

TERM. POWER FROM DRIVE:

OEC MEDICAL SYSTEMS, INC Training	9600 C-ARM	
	For Reference Only	Page 4 of 4
	30_CINE.DS4	11/13/96

9600 WORKSTATION CONFIGURATIONS

VASCULAR WITH 30FPS CINE LOOP OPTION

SCSI DISK JUMPER SETTINGS

9600 Mobile Digital C-Arm - Workstation Block Diagrams, Test Points, and Waveforms

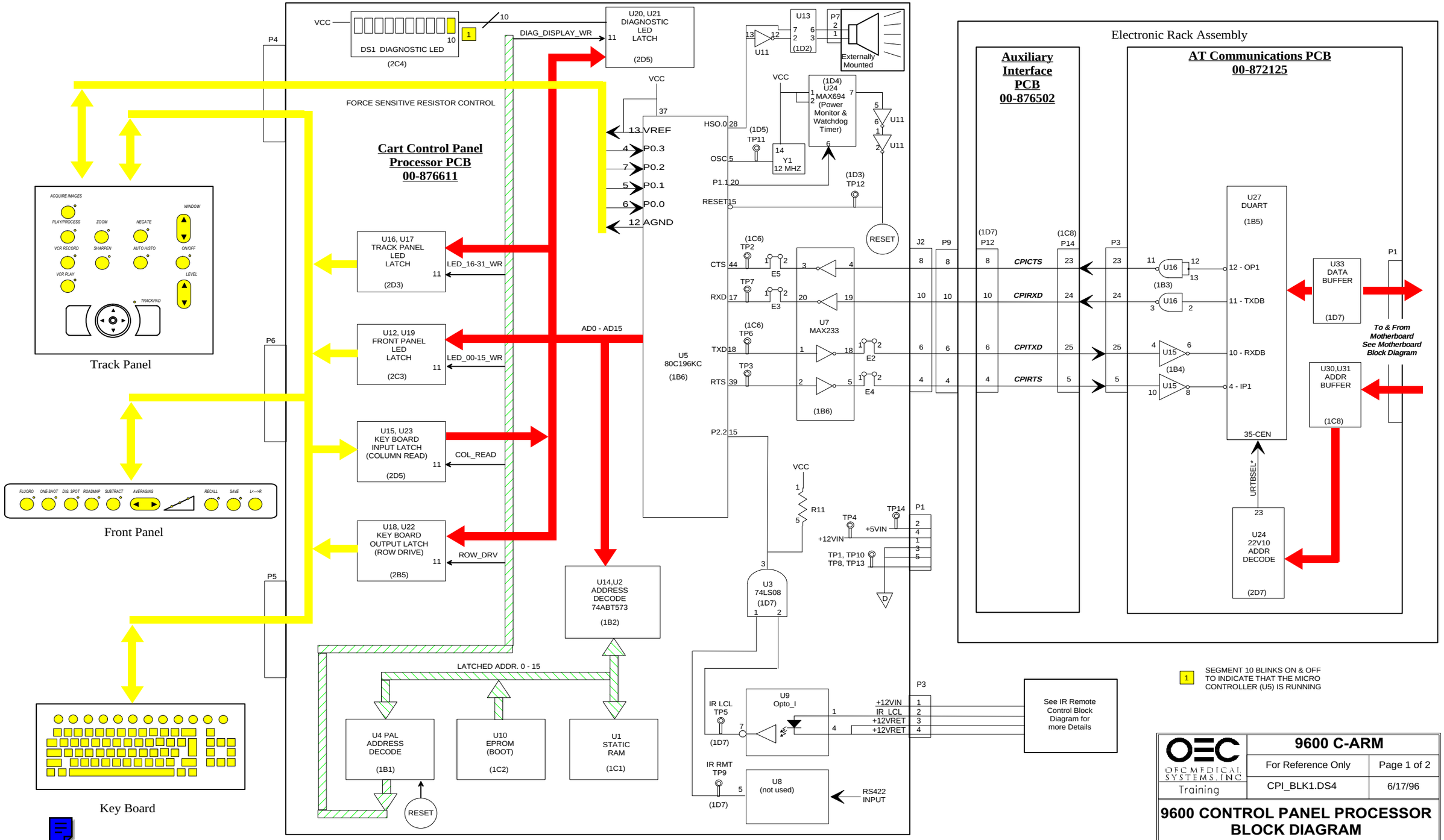

9600 Mobile Digital C-Arm - Workstation Block Diagrams, Test Points, and Signal Waveforms

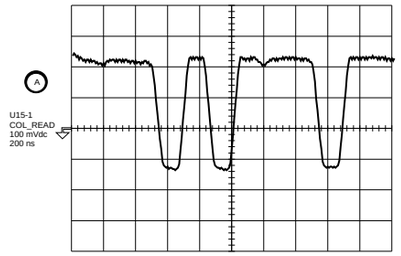

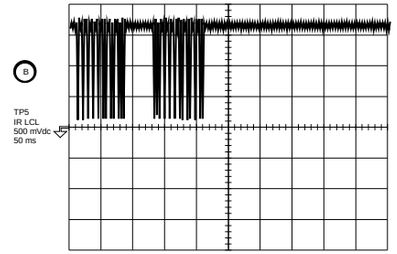

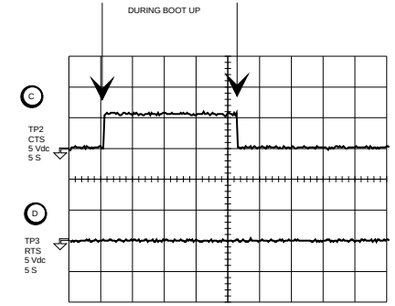

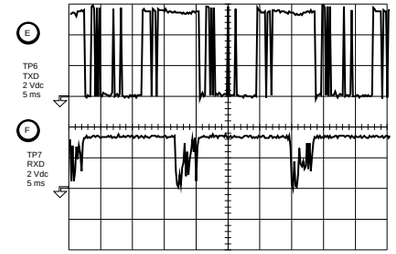

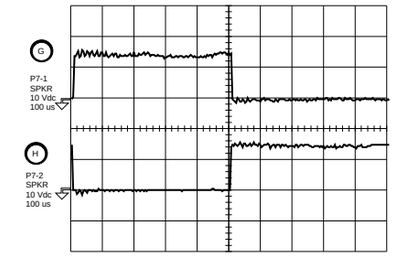

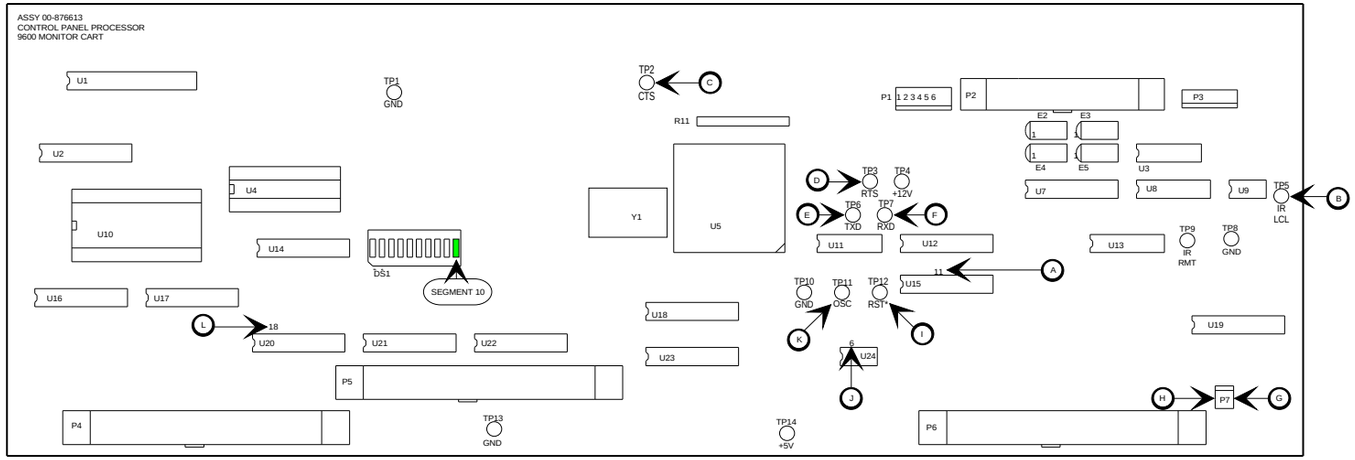

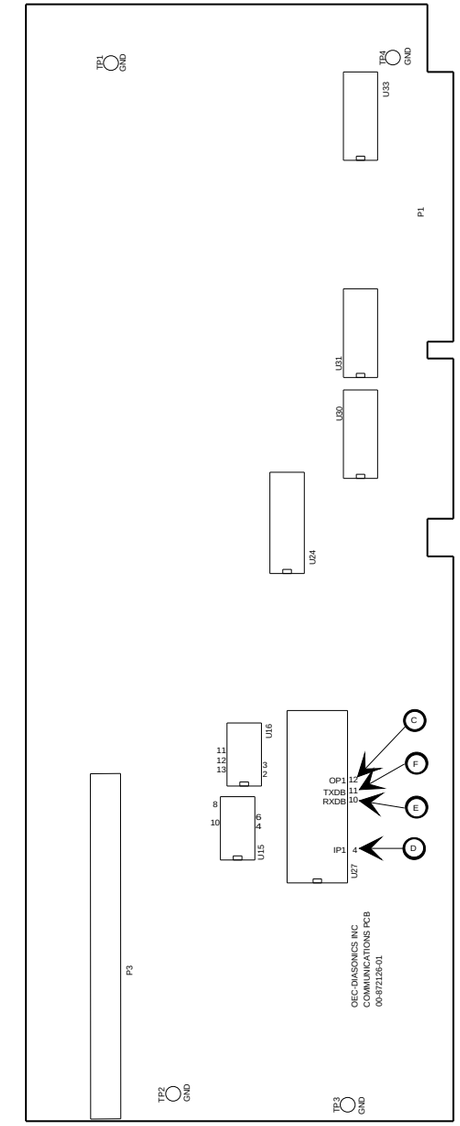

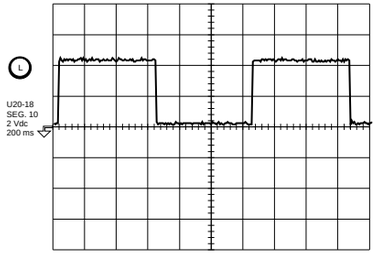

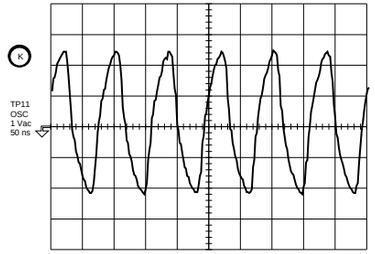

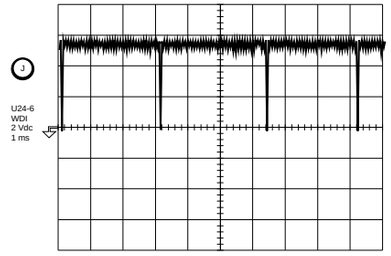

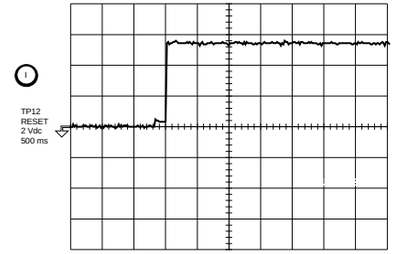

OEC MEDICAL SYSTEMS, INC Training	9600 C-ARM	
	For Reference Only	Page 2 of 2
	CPI_BLK1.DS4	6/17/96

9600 CONTROL PANEL PROCESSOR BLOCK DIAGRAM

9600 Mobile Digital C-Arm - Workstation Block Diagrams, Test Points, and Waveforms

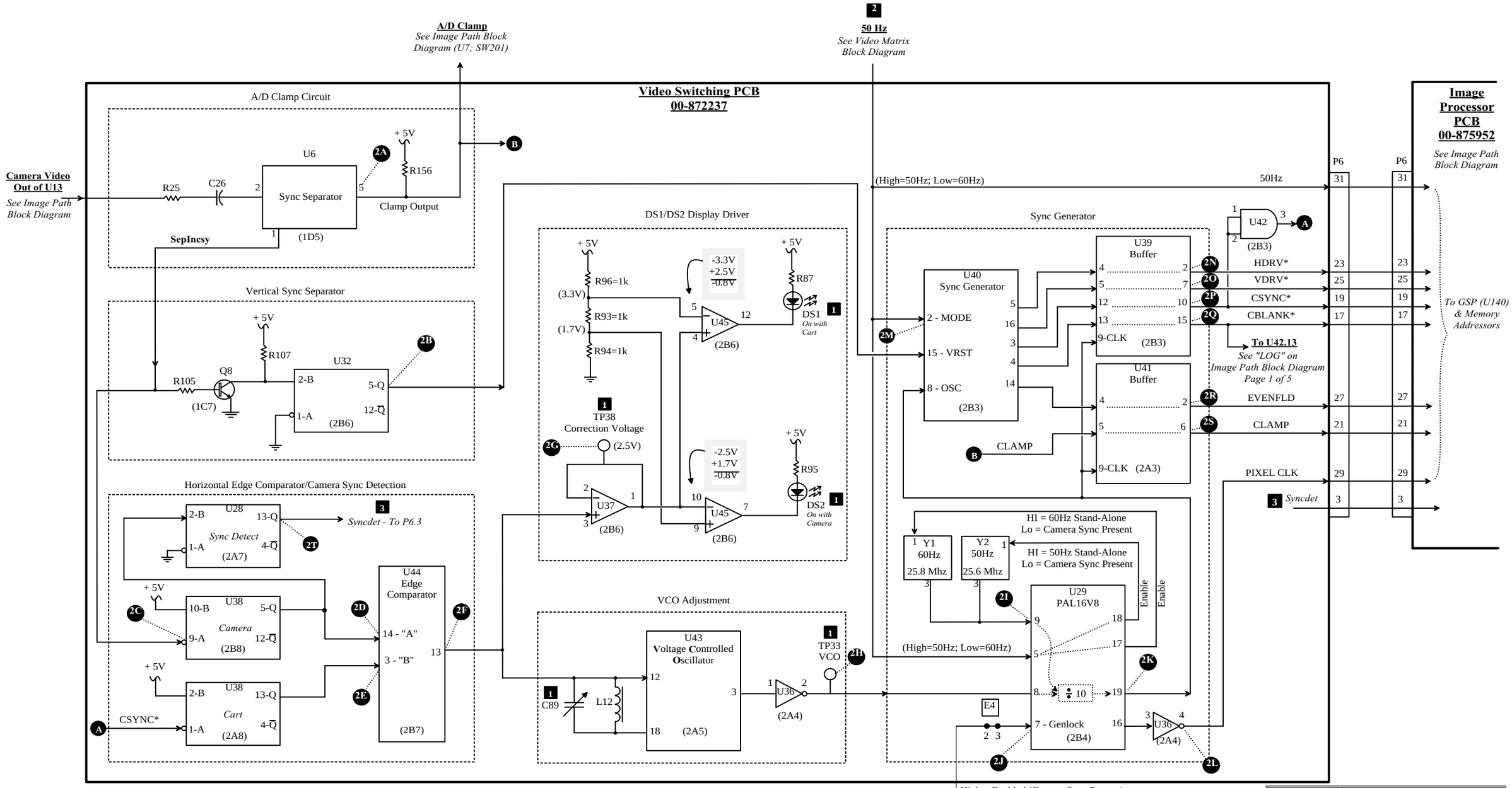

1 Adjust C89 so DS1 & DS2 are equally illuminated and both monitors have stable images when camera sync present.
TP33 will equal approximately 25.8 MHz.
TP38 will equal approximately 2.5 VDC.

2 This video control bit is changed through software for 50 or 60 Hz systems.
To do this: 1) Power on Cart, 2) Insert Diag. Disk, 3) Press F10, 4) Access Level 2, 5) Select Config & Hard Disk, 6) Set System Config. Then follow screen instructions.

3 **SYNC WITH CAMERA**
When camera sync is present, Sync Detect = TTL High. This signal is monitored by the Image Processor and forces GENLOCK bit TTL High. This forces U29 to use pin 8 as the input frequency for the sync generation circuitry.
STAND-ALONE MODE
When camera sync is not present, Sync Detect = TTL Low. This signal is monitored by the Image Processor and forces GENLOCK bit TTL Low. This forces U29 to use pin 9 as the input frequency for the sync generation circuitry, using the 50Hz or 60Hz crystal.

High = Enabled (Camera Sync Present)
U29 Pin 8 is frequency input pin.
Low = Disabled (Camera Sync Not Present)
U29 Pin 9 is frequency input pin.

3 **GenLock**
See Video Matrix Block Diagram

OEC Medical Systems, Inc.	9600 C-ARM	
	For Reference Only	Page 1 of 2
Training	GEN_LOK1.DS4	6/19/96

9600 WORKSTATION "GEN-LOCK" BLOCK DIAGRAM / WORKSHEET

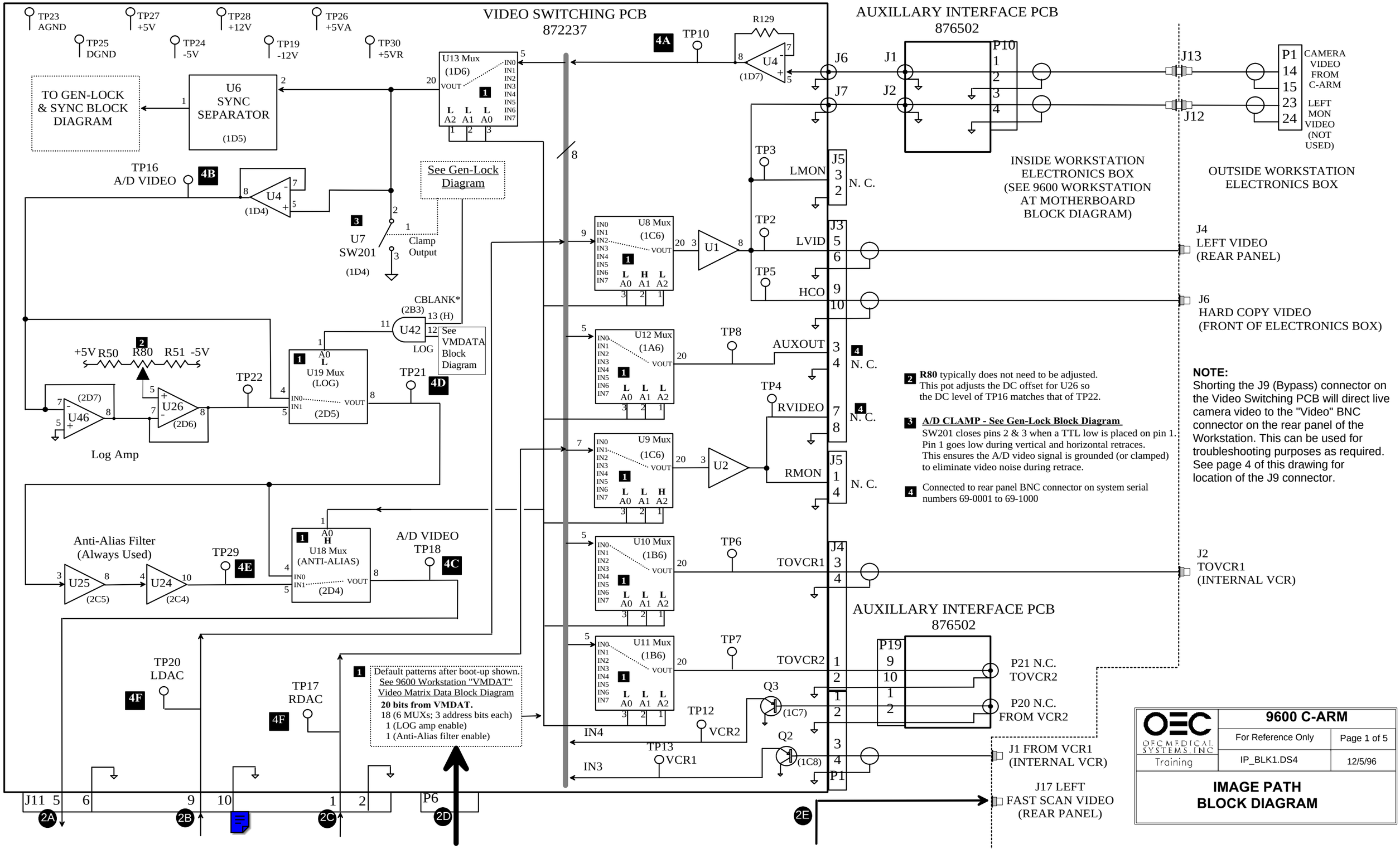
VIDEO SWITCHING PCB
872237
AUXILLARY INTERFACE PCB
876502
TP23 AGND
TP27 +5V
TP28 +12V
TP26 +5VA
TP25 DGND
TP24 -5V
TP19 -12V
TP30 +5VR
TO GEN-LOCK & SYNC BLOCK DIAGRAM
U6 SYNC SEPARATOR (1D5)
U13 Mux (1D6)
4A
TP10
R129
U4 (1D7)
J6
J7
J1
J2
P10
J13
J12
P1
CAMERA VIDEO FROM C-ARM
LEFT MON VIDEO (NOT USED)
INSIDE WORKSTATION ELECTRONICS BOX (SEE 9600 WORKSTATION AT MOTHERBOARD BLOCK DIAGRAM)
OUTSIDE WORKSTATION ELECTRONICS BOX
TP16 A/D VIDEO
4B
U4 (1D4)
See Gen-Lock Diagram
U7 SW201 (1D4)
Clamp Output
TP3
LMON
J5
N. C.
TP2
LVID
J3
U8 Mux (1C6)
U1
J4 LEFT VIDEO (REAR PANEL)
TP5
HCO
J6 HARD COPY VIDEO (FRONT OF ELECTRONICS BOX)
CBLANK* (2B3)
U42
See VMDATA Block Diagram
LOG
+5V R50 R80 R51 -5V
U19 Mux (LOG) (2D5)
TP22
TP21
4D
U12 Mux (1A6)
TP8
AUXOUT
TP4
RVIDEO
U46 (2D7)
U26 (2D6)
Log Amp
U9 Mux (1C6)
U2
RMON
Anti-Alias Filter (Always Used)
U25 (2C5)
U24 (2C4)
TP29
4E
U18 Mux (ANTI-ALIAS) (2D4)
A/D VIDEO TP18
4C
U10 Mux (1B6)
TP6
TOVCR1
J2 TOVCR1 (INTERNAL VCR)
AUXILLARY INTERFACE PCB 876502
U11 Mux (1B6)
TP7
TOVCR2
P19
P21 N.C. TOVCR2
P20 N.C. FROM VCR2
TP20 LDAC
4F
TP17 RDAC
4F
Default patterns after boot-up shown.
See 9600 Workstation "VMDAT" Video Matrix Data Block Diagram
20 bits from VMDAT.
18 (6 MUXs; 3 address bits each)
1 (LOG amp enable)
1 (Anti-Alias filter enable)
Q3 (1C7)
TP12
VCR2
IN4
Q2 (1C8)
TP13
VCR1
IN3
J1 FROM VCR1 (INTERNAL VCR)
J17 LEFT FAST SCAN VIDEO (REAR PANEL)
J11
P6
2A
2B
2C
2D
2E
2 R80 typically does not need to be adjusted. This pot adjusts the DC offset for U26 so the DC level of TP16 matches that of TP22.
3 A/D CLAMP - See Gen-Lock Block Diagram
SW201 closes pins 2 & 3 when a TTL low is placed on pin 1. Pin 1 goes low during vertical and horizontal retraces. This ensures the A/D video signal is grounded (or clamped) to eliminate video noise during retrace.
4 Connected to rear panel BNC connector on system serial numbers 69-0001 to 69-1000
NOTE:
Shorting the J9 (Bypass) connector on the Video Switching PCB will direct live camera video to the "Video" BNC connector on the rear panel of the Workstation. This can be used for troubleshooting purposes as required. See page 4 of this drawing for location of the J9 connector.
OEC MEDICAL SYSTEMS, INC
Training
9600 C-ARM
For Reference Only
Page 1 of 5
IP_BLK1.DS4
12/5/96
IMAGE PATH BLOCK DIAGRAM

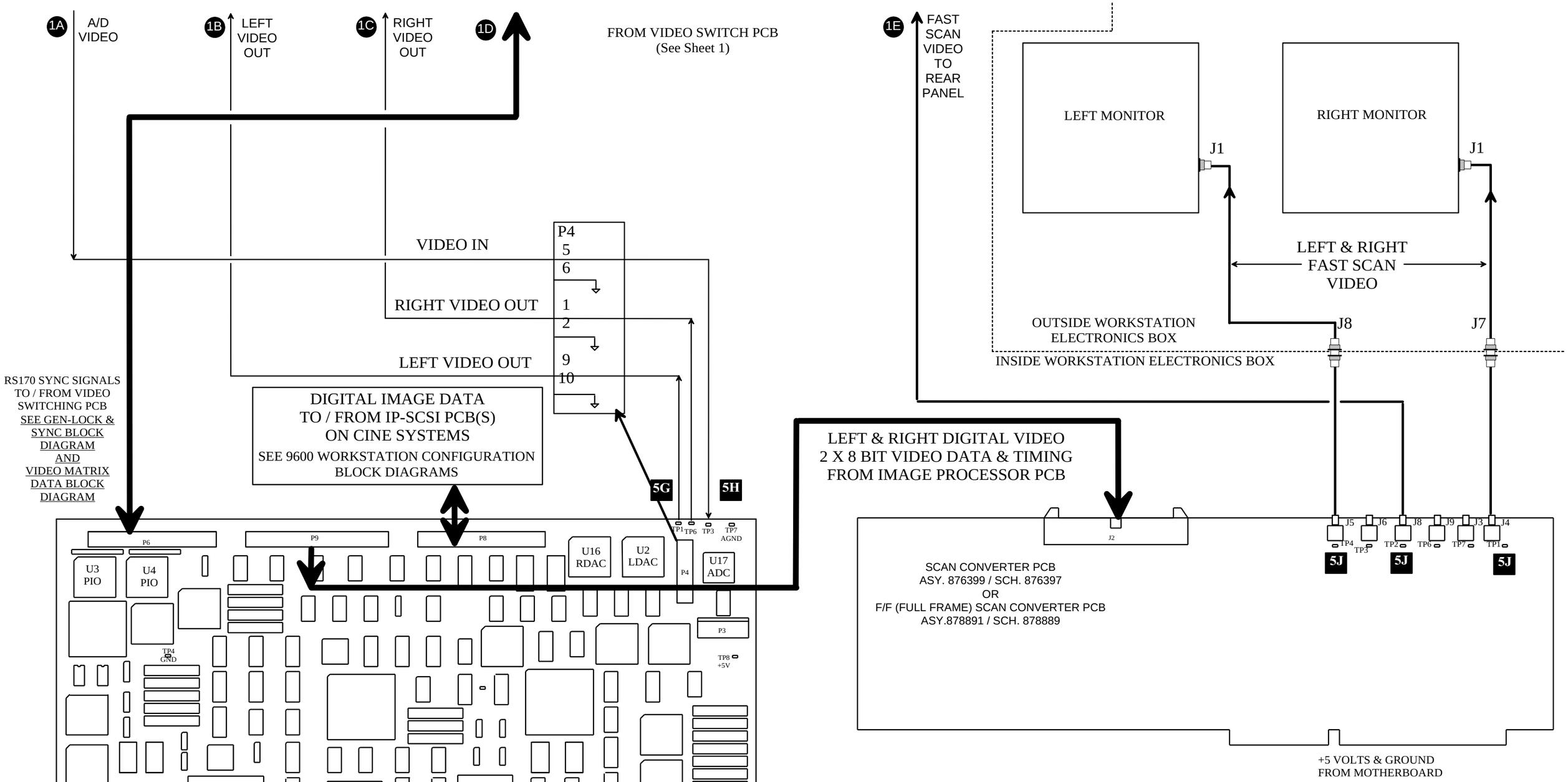

OEC MEDICAL SYSTEMS, INC. Training	9600 C-ARM	
	For Reference Only	Page 2 of 5
	IP_BLK1.DS4	12/5/96
IMAGE PATH BLOCK DIAGRAM		

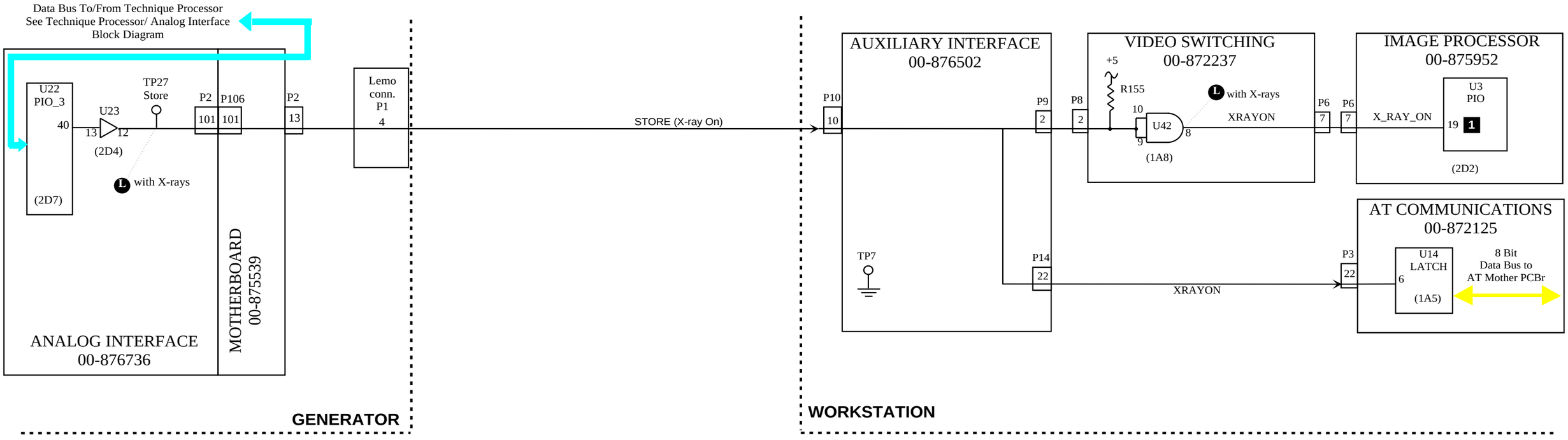

1 Image Processor Enable (This signal has nothing to do with X-ray logic.
A TTL Low indicates the system is taking X-rays and the IP is enabled.

OEC MEDICAL SYSTEMS, INC Training	9600 C-ARM	
	For Reference Only	Page 3 of 5
	IP_BLK1.DS4	12/5/96
	IMAGE PATH BLOCK DIAGRAM	

To view Left and Right DAC and Monitor outputs, use this computer generated image. (Press TEST PATTERN; Swap L>R; TEST PATTERN)

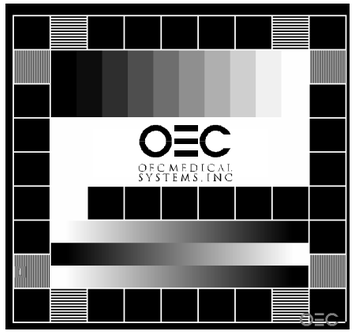

This computer generated image should appear on both left and right monitors.

This is one horizontal line from the image shown on the left. Note the gray scale levels. Your waveform may vary slightly depending on which horizontal line being viewed.

1F

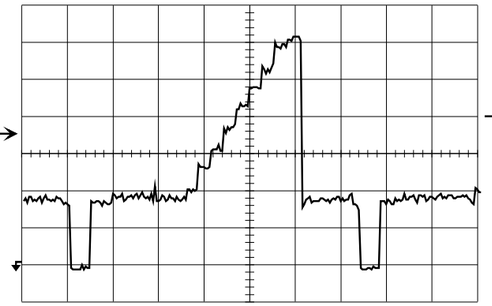

200 mV dc
10 us

AUTO FLUORO MODE - NOTHING IN FIELD
Amplitude may vary slightly.

1E

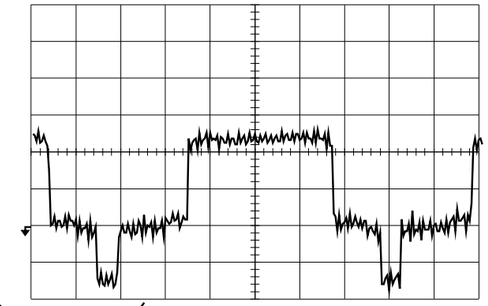

200 mV dc
10 us

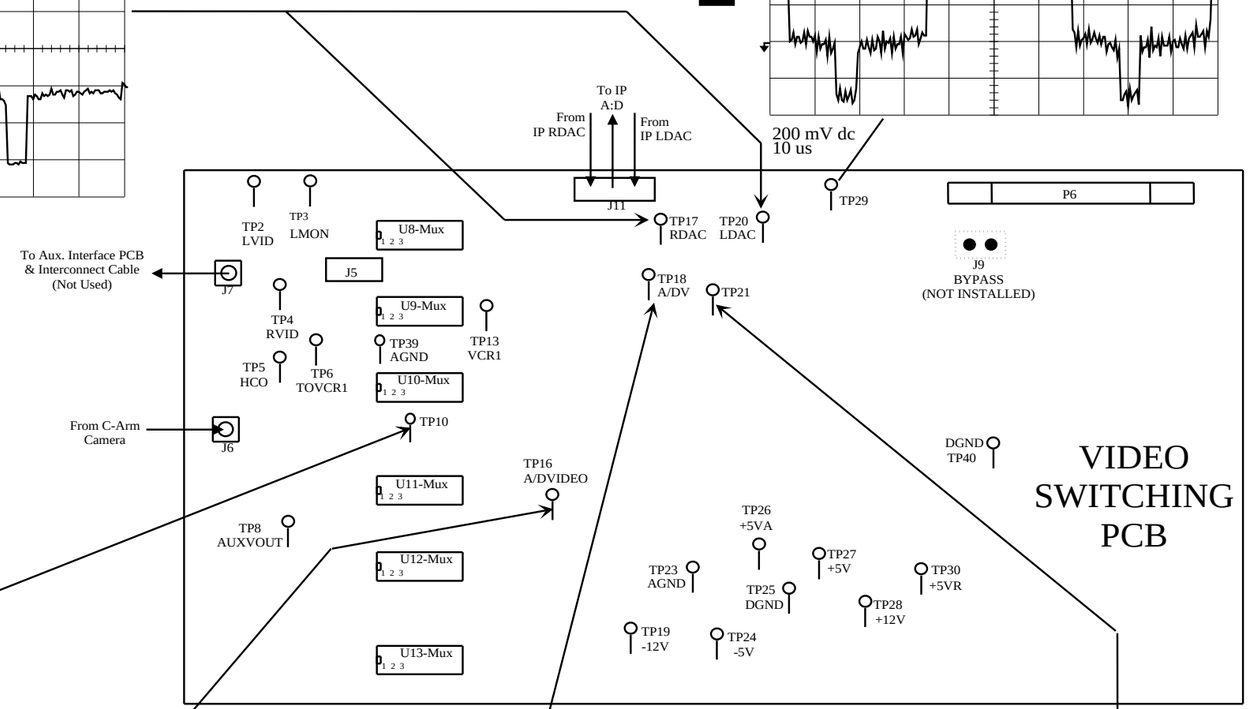

AUTO FLUORO MODE - NOTHING IN FIELD
Amplitude may vary slightly.

1A

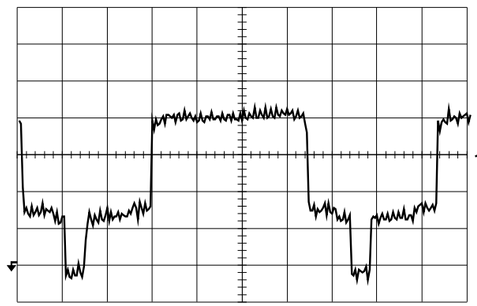

200 mV dc
10 us

AUTO FLUORO MODE - NOTHING IN FIELD
Amplitude may vary slightly.

1B

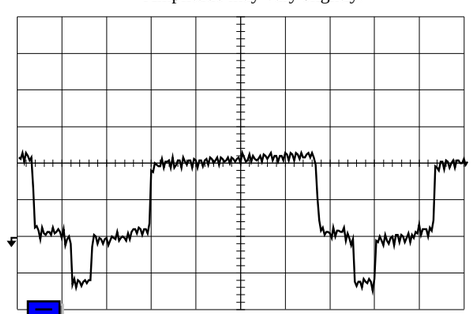

500 mV dc
10 us

AUTO FLUORO MODE - NOTHING IN FIELD
Amplitude may vary slightly.

1C

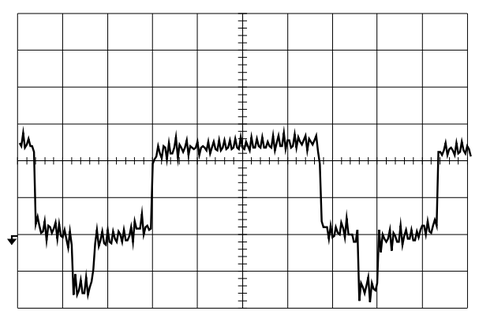

200 mV dc
10 us

AUTO FLUORO MODE - NOTHING IN FIELD
Amplitude may vary slightly.

1D

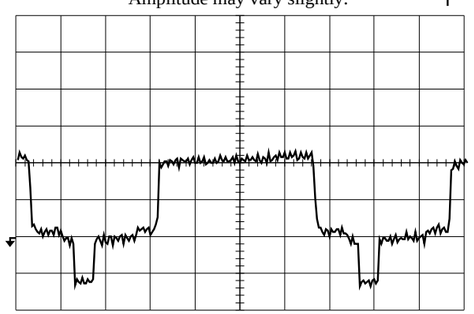

500 mV dc
10 us

OEC MEDICAL SYSTEMS, INC Training	**9600 C-ARM**	
	For Reference Only	Page 4 of 5
	IP_BLK1.DS4	12/5/96

IMAGE PATH BLOCK DIAGRAM

To view Left and Right DAC and Monitor outputs, use this computer generated image.
(Press TEST PATTERN; Swap L>R; TEST PATTERN)

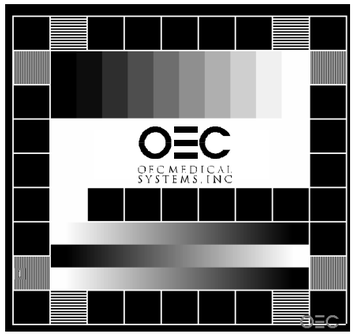

This computer generated image should appear on both left and right monitors.

This is one horizontal line from the image shown on the left. Note the gray scale levels. Your waveform may vary slightly depending on which horizontal line being viewed.

2G

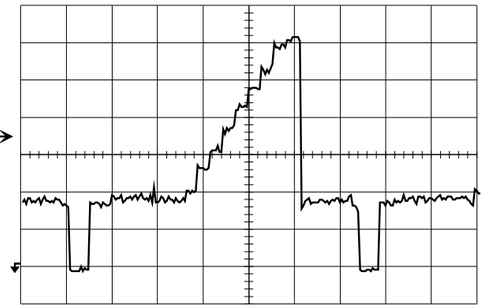

200 mV dc
10 us

AUTO FLUORO MODE - NOTHING IN FIELD
Amplitude may vary slightly.

2H

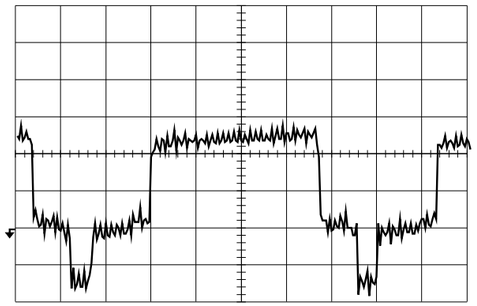

200 mV dc
10 us

This is one horizontal line from the image shown on the left. Note the horizontal timing and the gray scale levels. Your waveform may vary slightly depending on which horizontal line being viewed.

2J

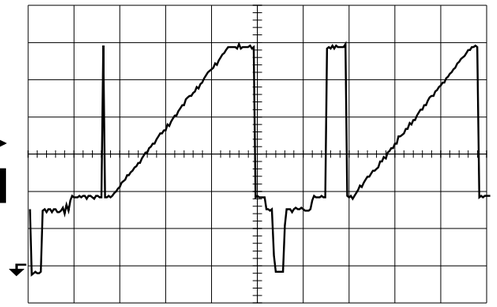

200 mV dc
5 us

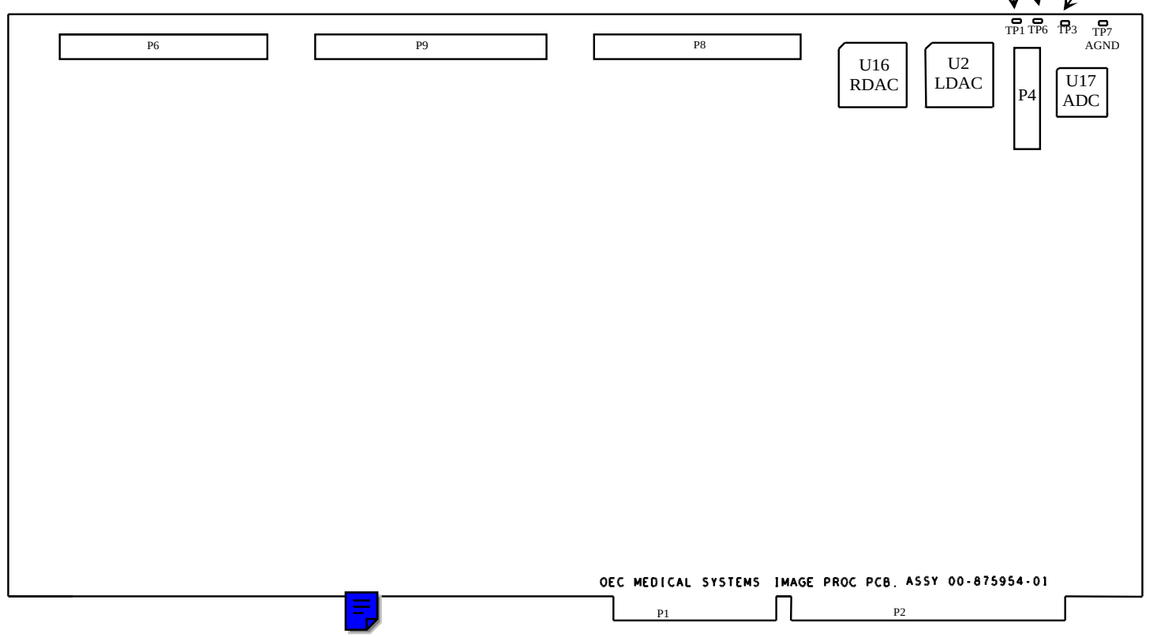

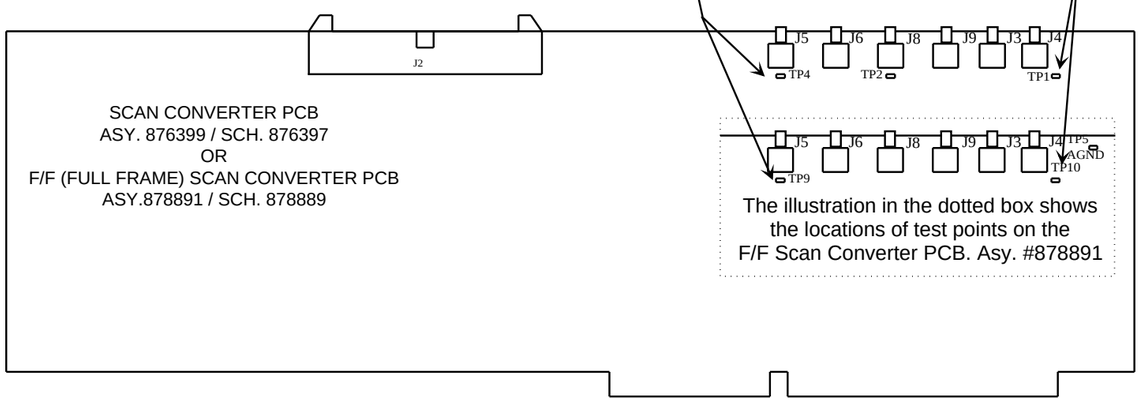

SCAN CONVERTER PCB
ASY. 876399 / SCH. 876397
OR
F/F (FULL FRAME) SCAN CONVERTER PCB
ASY.878891 / SCH. 878889

The illustration in the dotted box shows the locations of test points on the F/F Scan Converter PCB. Asy. #878891

OEC MEDICAL SYSTEMS, INC Training	9600 C-ARM	
	For Reference Only	Page 5 of 5
	IP_BLK1.DS4	12/5/96

IMAGE PATH BLOCK DIAGRAM

9600 Mobile Digital C-Arm - Workstation Block Diagrams, Test Points, and Signal Waveforms

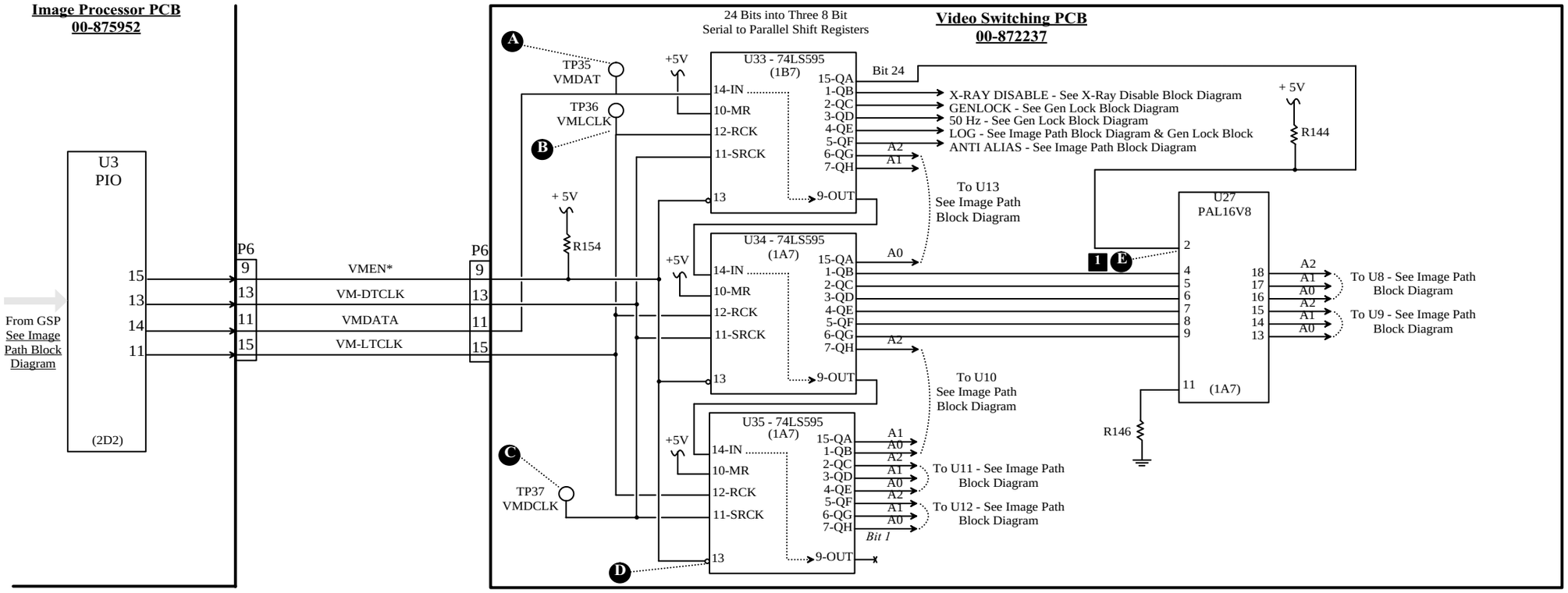

VIDEO SWITCHING PCB

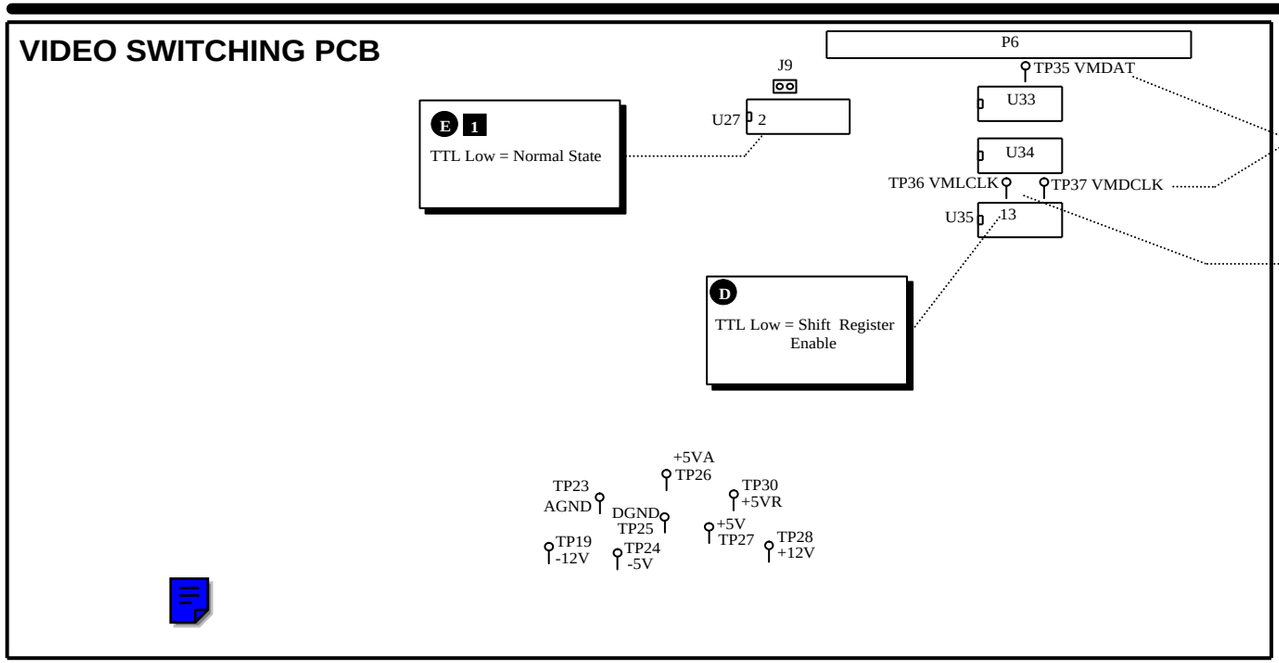

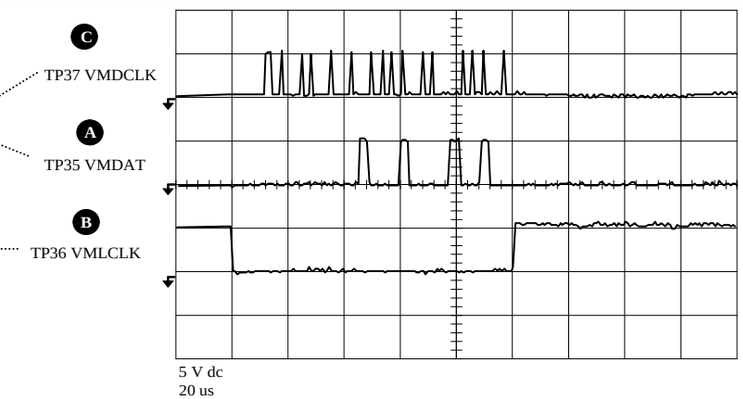

WAVEFORMS & DATA TAKEN AFTER SYSTEM HAS SUCCESSFULLY BOOTED UP.

1 Bit 24 (U27.2)
This bit is always set low. This allows PAL U27 to initialize muxes U8 & U9 using the data from U34. If this bit is high (i.e., due to a transmission error) U27 will set mux U8 to the BYPASS mode (see note 1 above).

OEC MEDICAL SYSTEMS, INC Training	9600 C-ARM	
	For Reference Only	Page 1 of 1
	VM_DAT1.DS4	6/19/96

9600 WORKSTATION "VMDAT"
VIDEO MATRIX DATA
BLOCK DIAGRAM / WORKSHEET

9600 Mobile Digital C-Arm - Workstation Block Diagrams, Test Points, and Signal Waveforms

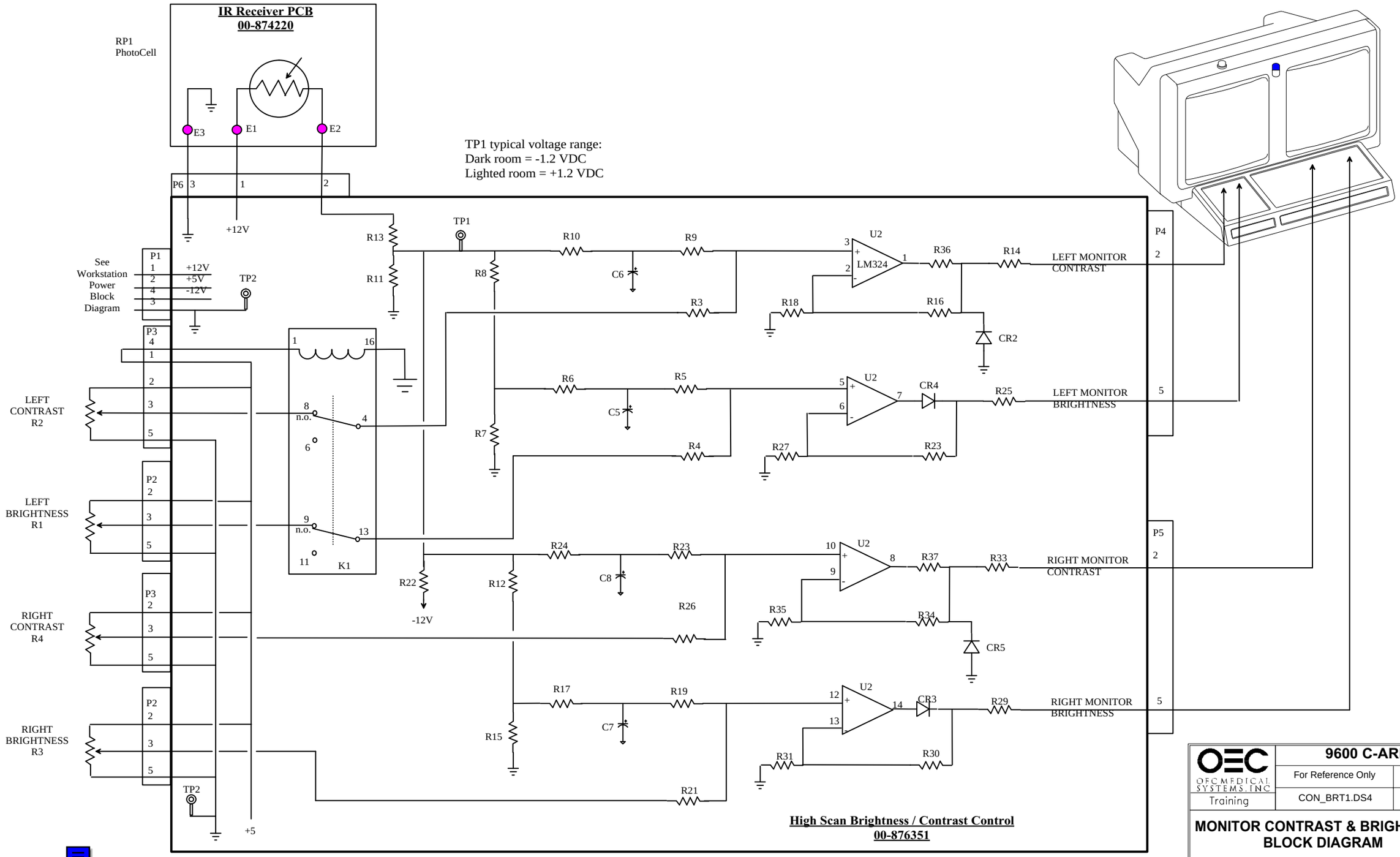

OEC MEDICAL SYSTEMS, INC Training	9600 C-ARM	
	For Reference Only	Page 1 of 2
	CON_BRT1.DS4	6/17/96
MONITOR CONTRAST & BRIGHTNESS BLOCK DIAGRAM		

9600 Mobile Digital C-Arm - Workstation Block Diagrams, Test Points, and Waveforms

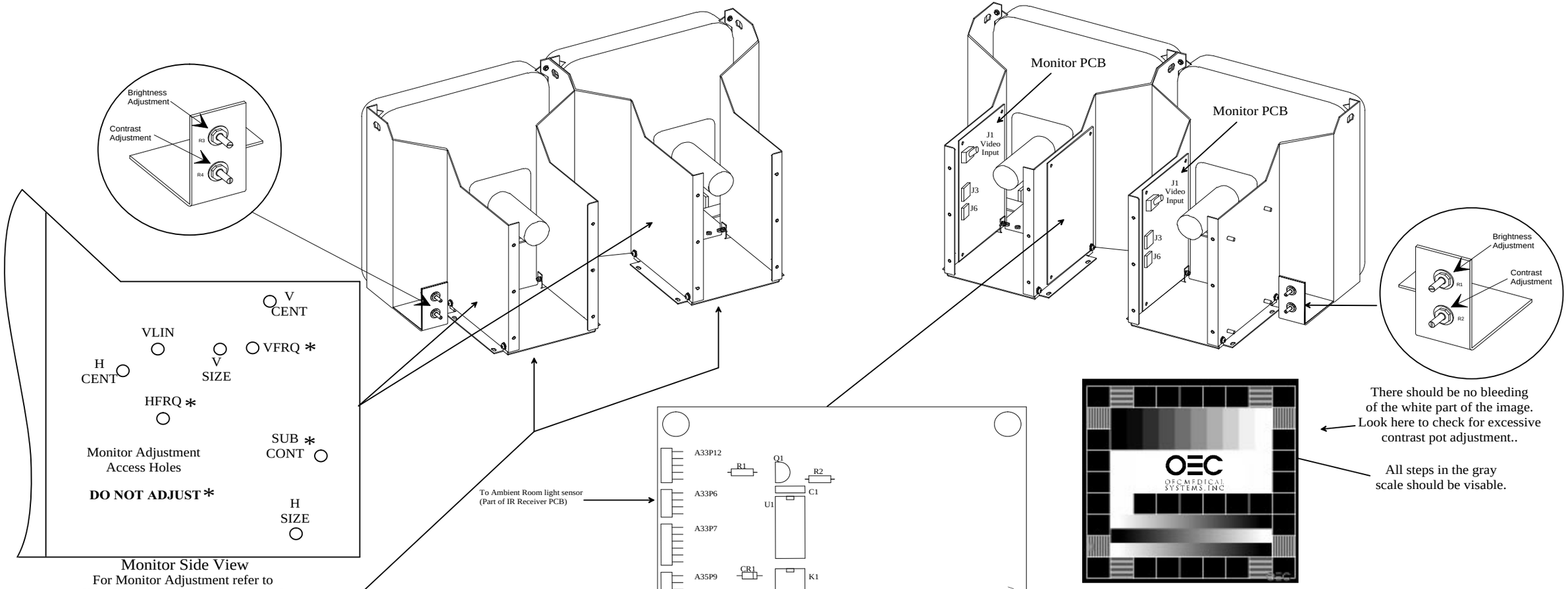

Monitor Side View
For Monitor Adjustment refer to
IMAGE SYSTEM CALIBRATION

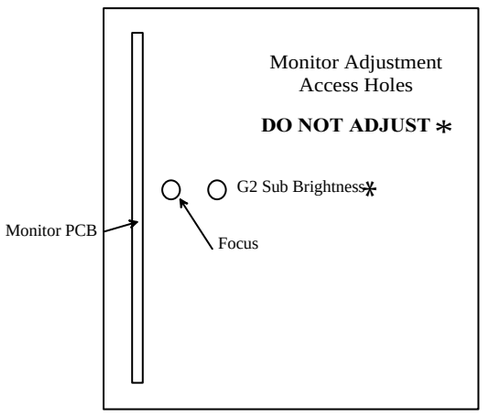

Monitor Bottom View
Adjustment access holes are
located in the monitor mounting plate

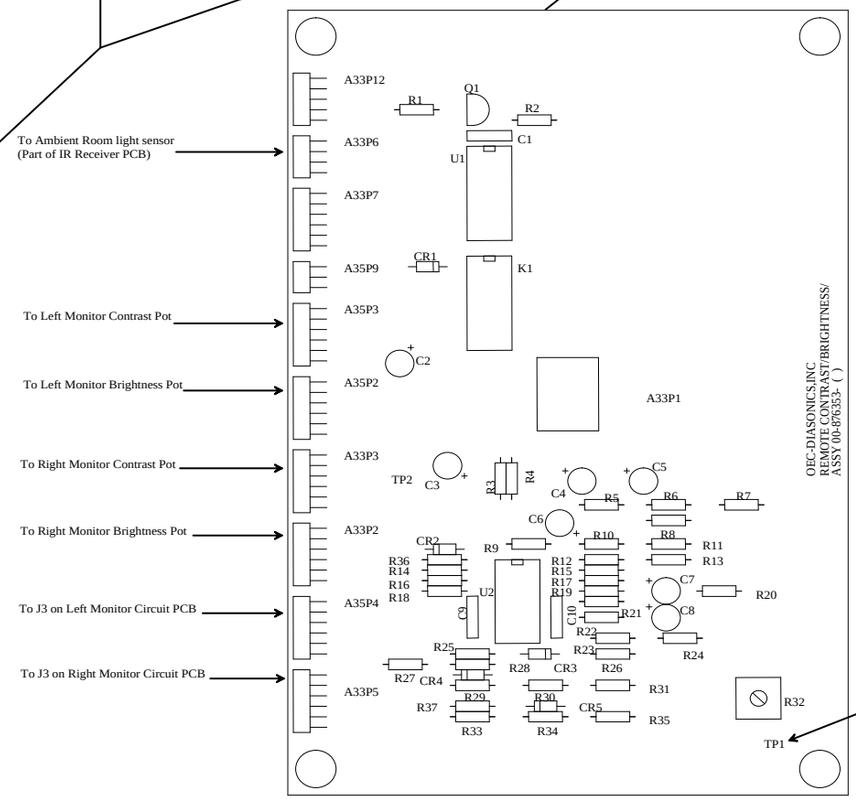

There should be no bleeding of the white part of the image. Look here to check for excessive contrast pot adjustment..

All steps in the gray scale should be visable.

MONITOR BRIGHTNESS & CONTRAST SETUP

Setup the monitor brightness and contrast in normal room lighting conditions.

1. Turn off AUTO HISTO & WINDOW / LEVEL
2. Call up TEST PATTERN on both monitors by pressing the TEST PATTERN button and the L-R button.
3. Adjust brightness and contrast pots R1 - R4 to minimum.
4. Adjust the brightness pots R1 & R3 until the raster lines on both monitors are just visable.
5. Adjust the contrast pots R2 & R4 until all steps in the gray scale test pattern on both monitors can be seen without causing the white areas of the image to bleed.

TP1 typical voltage range:
Dark room = -1.2 VDC
Lighted room = +1.2 VDC

OEC OFC MEDICAL SYSTEMS, INC Training	9600 C-ARM	
	For Reference Only	Page 2 of 2
	CON_BRT1.DS4	6/17/96

MONITOR CONTRAST & BRIGHTNESS BLOCK DIAGRAM

9600 Mobile Digital C-Arm - Workstation Block Diagrams, Test Points, and Waveforms

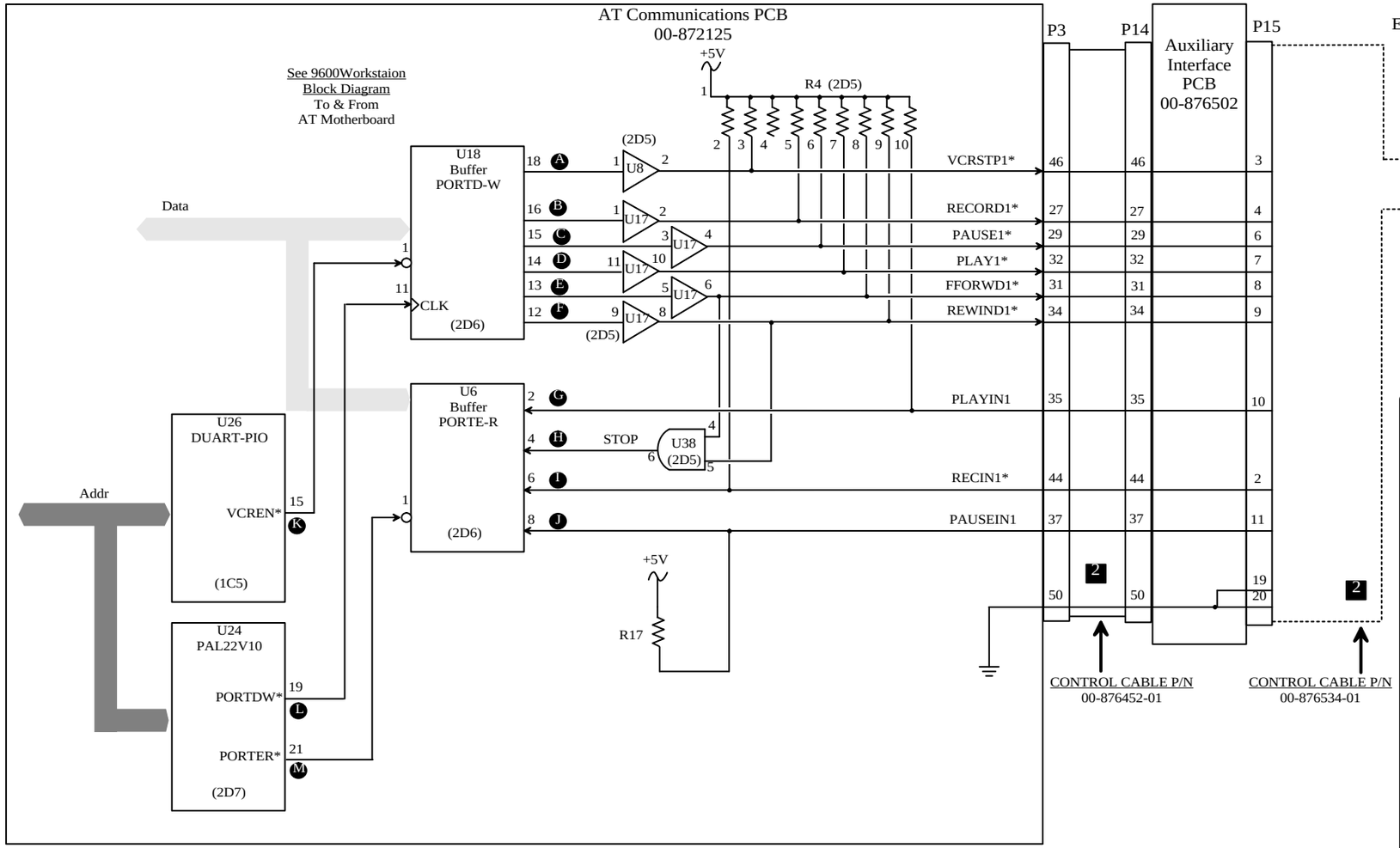

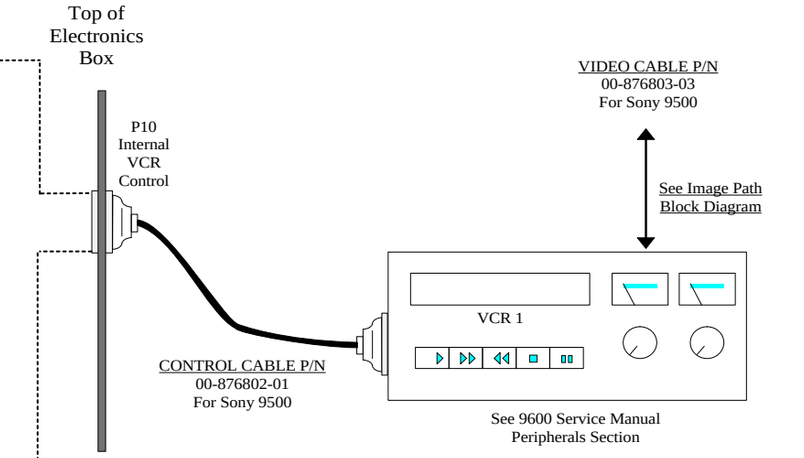

1

Test Point	PAUSE	RECORD	PLAY	Control Cable On/Off
A	HIGH	Pulses LOW when VCR Record Lite turned OFF on Trackpad.	HIGH	N/C from PAUSE
B	HIGH	Pulses LOW when VCR Record Lite turned ON on Trackpad.	HIGH	N/C from PAUSE
C	HIGH	With VCR Record Lite ON, this pulses LOW when a) X-ray switch pressed or released, or b) VCR record lite turned OFF.	Pulses LOW when VCR Play Lite turned ON or OFF.	Pulses LOW without control cable connected.
D	HIGH	Pulses LOW when VCR Record Lite turned OFF.	HIGH	Pulses LOW without control cable connected.
E	HIGH	HIGH	HIGH	N/C from PAUSE
F	HIGH	HIGH	HIGH	N/C from PAUSE
G	LOW	Pulses HIGH when VCR Record Lite turned OFF.	LOW	TRI-STATE without control cable connected.
H	HIGH	HIGH	HIGH	N/C from PAUSE
I	HIGH	LOW = VCR Record Lite ON HIGH = VCR Record Lite OFF	HIGH	N/C from PAUSE
J	LOW	HIGH = VCR Record Lite ON & X-ray switch pressed. PULSES HIGH = VCR Record Lite turned OFF.	HIGH = VCR Play Lite ON	HIGH without control cable connected.
K	LOW	LOW	LOW	N/C from PAUSE
L	HIGH	PULSES LOW = VCR Record Lite turned ON & X-ray switch pressed, or when VCR Record Lite turned OFF.	PULSES LOW when VCR Play Lite turned ON or OFF.	PULSES LOW without control cable connected.
M	PULSES LOW every 6mS (APPROX.).	PULSES LOW every 6mS (APPROXIMATELY).	PULSES LOW every 6mS (APPROXIMATELY).	N/C from PAUSE

VCR Control

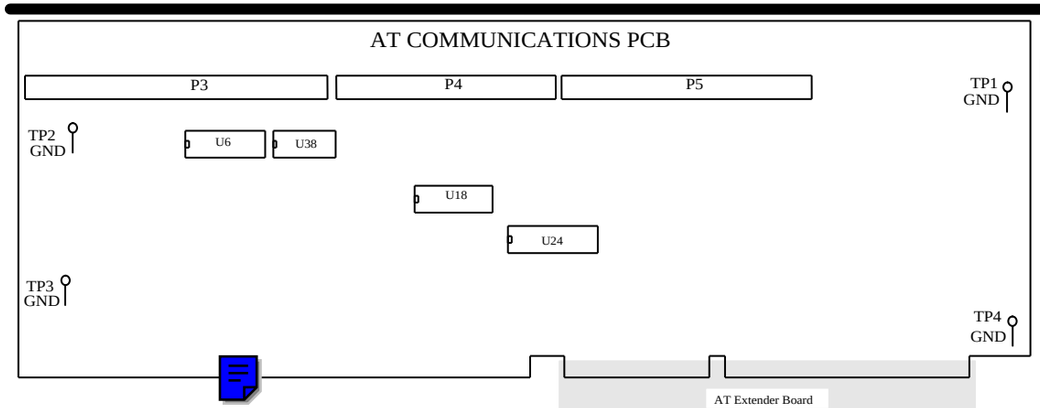

1 Test point data taken with VCR connected and configured in software (F10 with disk, Access Level 2, Configuration/Hard Disk, Set System Configuration.

2 Pin-for-pin connection

OEC MEDICAL SYSTEMS, INC Training	9600 C-ARM	
	For Reference Only	Page 1 of 3
	PERPHRL1.DS4	6/19/96

9600 WORKSTATION PERIPHERALS BLOCK DIAGRAM / WORKSHEET

9600 Mobile Digital C-Arm - Workstation Block Diagrams, Test Points, and Waveforms

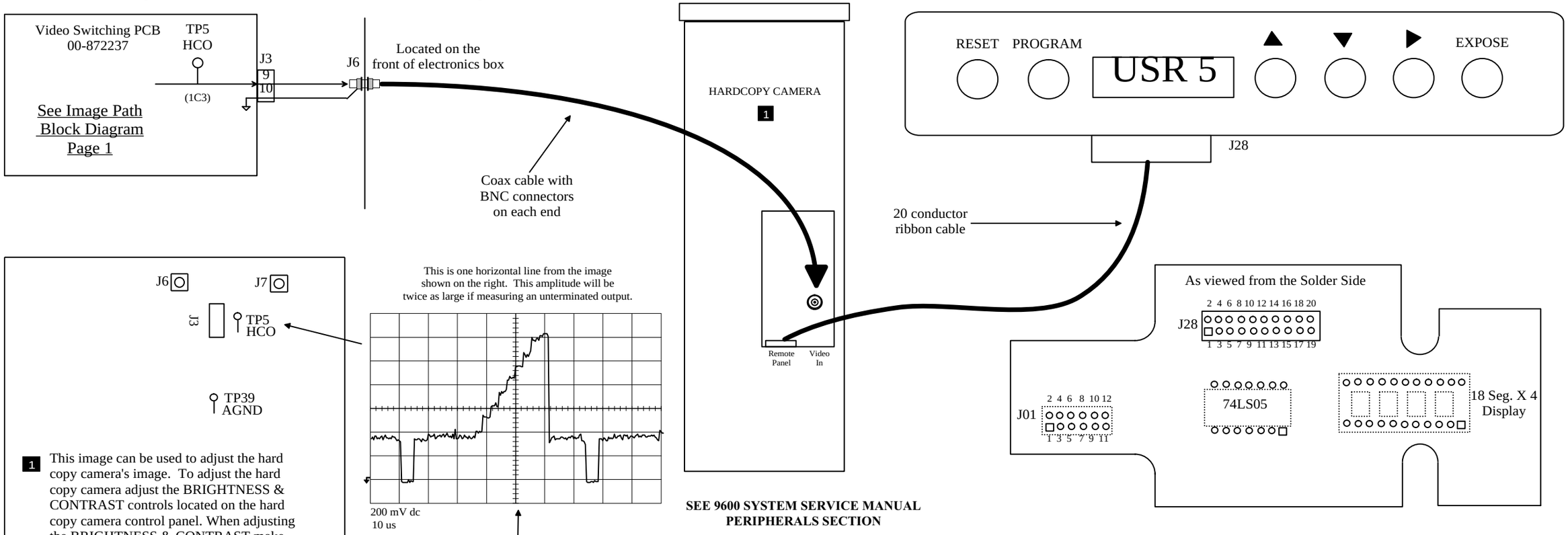

1 This image can be used to adjust the hard copy camera's image. To adjust the hard copy camera adjust the BRIGHTNESS & CONTRAST controls located on the hard copy camera control panel. When adjusting the BRIGHTNESS & CONTRAST make sure that "AUTO HISTO" is TURNED OFF.

After the camera has been adjusted properly to the Test Pattern, use the WINDOW & LEVEL CONTROLS or AUTO HISTO to adjust diagnostic images on the hard copy camera. Do not use the brightness & contrast knobs found on the back of the monitors.

VIDEO SWITCHING PCB

1 To view this computer generated image for the left monitor: (Press TEST PATTERN)

Trouble Shooting Hints

LED test: To test the LED display, turn on the Workstation Key and observe that all segments of the display light up momentarily as the multi format camera powers up. If the LEDs do not light properly, verify that J28 is plugged in correctly.

Button Tests: All tests listed are done with the camera turned on. If the buttons do not respond when pressed, check the following signals:

Reset: Press reset and verify that J01-11 and J28-3 goes HI (+5V).
Program: Press program & check for pulse at J28-4, J01-9 and J28-11.
Up: Press up & check for pulse at J28-4, J01-7 and J28-12.
Down: Press down & check for pulse at J28-4, J01-5 and J28-15.
Advance: Press advance and check for pulse at J28-4, J01-3 and J28-14.
Expose: Press expose and check for pulse at J28-4, J01-1 and J28-13.

If there are no pulses at J28-4, the problem is in the camera itself.
If there are pulses at J28-4, but no pulses on the other pins listed above the problem is in the panel assembly.

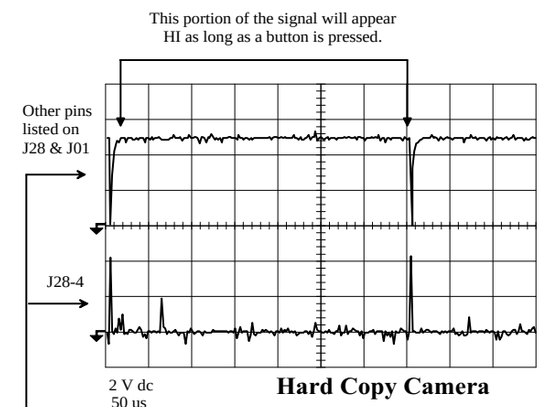

Hard Copy Camera

OEC MEDICAL SYSTEMS, INC Training	9600 C-ARM	
	For Reference Only	Page 2 of 3
	PERPHRL1.DS4	6/19/96

9600 WORKSTATION PERIPHERALS BLOCK DIAGRAM / WORKSHEET

9600 Mobile Digital C-Arm - Workstation Block Diagrams, Test Points, and Signal Waveforms

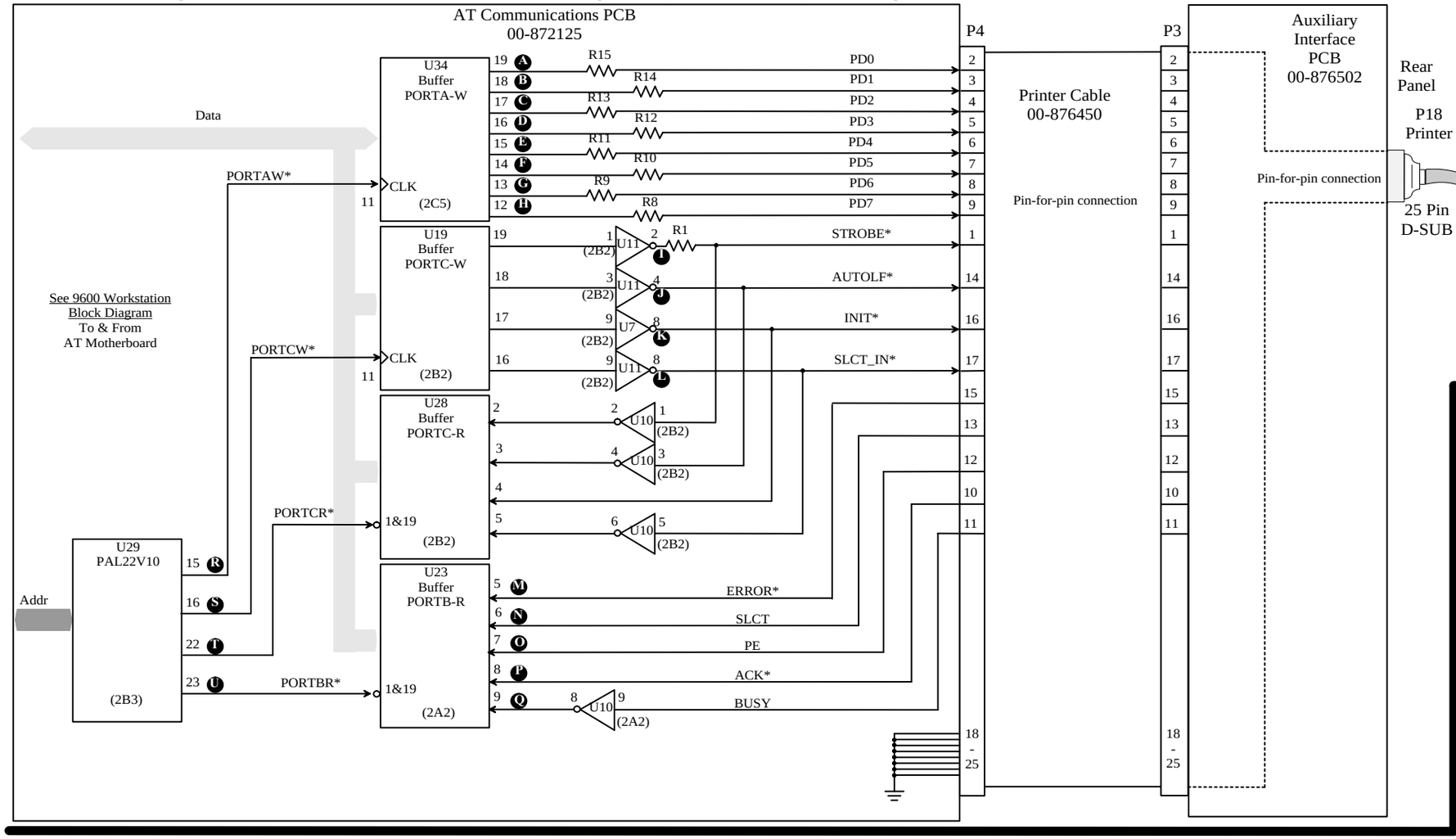

SEE 9600 SYSTEM SERVICE MANUAL PERIPHERALS SECTION

1

Test Point	Idle or Printing	Start of Print (Momentary)
A	LOW	PULSES
B	HIGH	PULSES
C	LOW	PULSES
D	HIGH	PULSES
E	LOW	PULSES
F	LOW	PULSES
G	LOW	PULSES
H	LOW	PULSES
I	HIGH	HIGH
J	HIGH	HIGH
K	HIGH	HIGH
L	LOW	LOW
M	Tri-State	Tri-State
N	Tri-State	Tri-State
O	LOW	LOW
P	Tri-State	Tri-State
Q **2**	HIGH	HIGH
R	HIGH	HIGH
S	HIGH	HIGH
T	HIGH	HIGH
U	HIGH	PULSES

Printer

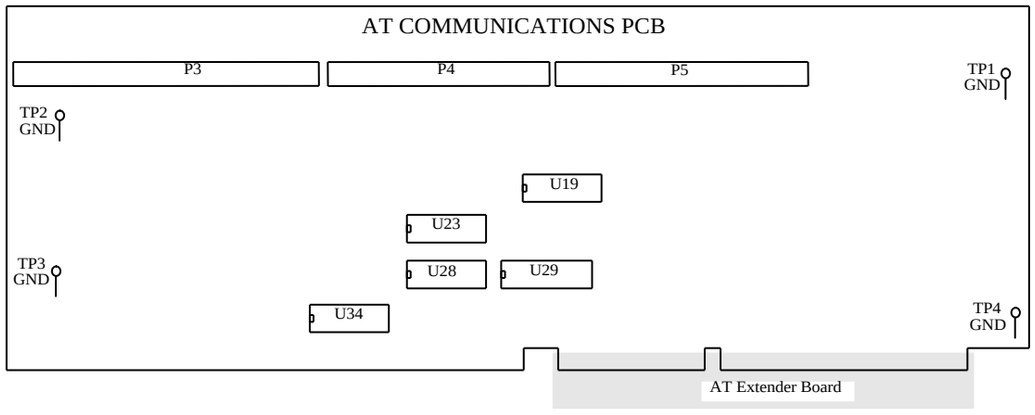

1 Test point data taken by printing patient summary. Press F5, then print. Some lines toggle as shown in the "Start of Print" column. Then, they return to the same state as when the printer is setting idle.

2 High = Printer On-Line
Low = Printer Off-Line

OEC OFC MEDICAL SYSTEMS, INC. Training	9600 C-ARM	
	For Reference Only	Page 3 of 3
	PERPHRL1.DS4	6/19/96

9600 WORKSTATION PERIPHERALS BLOCK DIAGRAM / WORKSHEET

9600 Mobile Digital C-Arm - Workstation Block Diagrams, Test Points, and Signal Waveforms

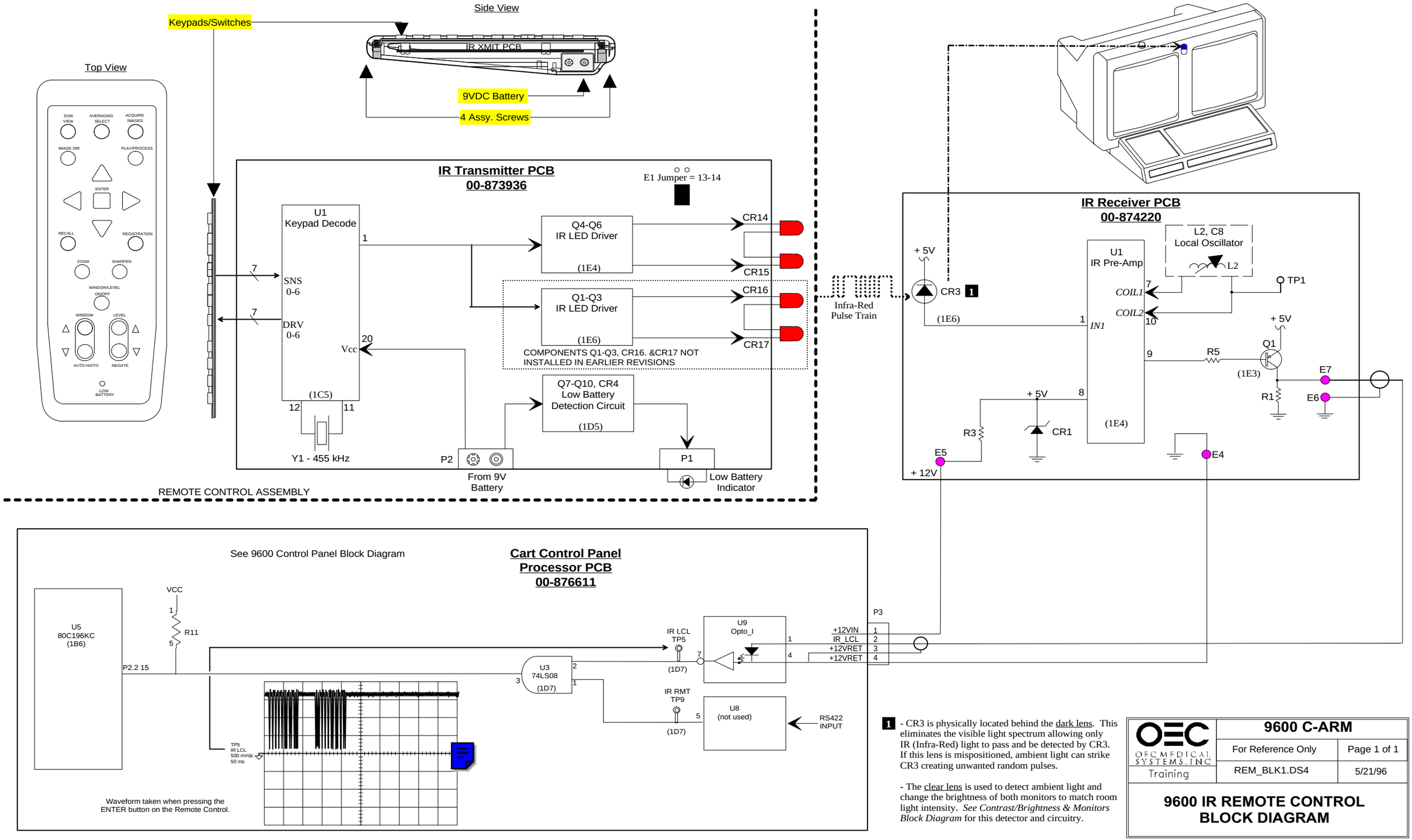

1 - CR3 is physically located behind the dark lens. This eliminates the visible light spectrum allowing only IR (Infra-Red) light to pass and be detected by CR3. If this lens is mispositioned, ambient light can strike CR3 creating unwanted random pulses.

- The clear lens is used to detect ambient light and change the brightness of both monitors to match room light intensity. *See Contrast/Brightness & Monitors Block Diagram* for this detector and circuitry.

OEC MEDICAL SYSTEMS, INC Training	9600 C-ARM	
	For Reference Only	Page 1 of 1
	REM_BLK1.DS4	5/21/96
9600 IR REMOTE CONTROL BLOCK DIAGRAM		