Spare Parts

for

"Super-Sentinel" Steam Waggons

List No. N.P. 2100

OCT. 1st, 1926

All prices in this List are subject to a discount of 10% until further notice.

5% interest is charged on overdue accounts.

December 1st, 1926.

This List cancels all previous ones.

In cases where parts described in this list are identical with those in use on "Sentinel" Waggons, as distinct from Super "Sentinels," the prices shown in any previous lists relating to "Sentinel" Waggons are hereby amended, and from the date of publication of this list, such parts will be invoiced at the prices shown herein.

The "Sentinel" Waggon Works Ltd.
Shrewsbury, England.

Please note these Instructions when ordering Parts

State both code word and list No. in order to avoid errors.

State *Maker's* Waggon No. (stamped on brass plate on side of apron) of vehicle for which parts are required.

Give definite instructions as to Railway Station or Siding at which goods are required.

If parts are to be sent by any particular way, please say so when ordering.

Unless otherwise requested, parcels under 11-lbs. weight are sent per post; parcels up to 112-lbs. weight are sent by passenger train (half rate owner's risk), parcels above 112-lbs. weight are sent by goods.

If a part is apparently not illustrated, give full description and rough sketch when ordering.

When ordering bolts, please state diameter and length, excluding the head.

If it is known that parts are of later design than those originally built into the waggon, please say so when ordering.

When ordering driving chains, state number of links required.

When ordering chain parts, state name of Makers of chain (to be found on each link).

If goods are found to be unsuitable, do not return without first writing for further information.

When returning goods for any reason whatever, see that they are clearly labelled with Sender's name, and advise us separately by post of their return.

Goods thus returned should be consigned to our Siding, L.M.S.R., carriage paid.

When ordering by telegram, use list Nos. and code words, but for parts not clearly identified or for special despatch instructions, use sufficient plain language. A few extra words when ordering often avoid much loss of time and money.

All empties must be returned to our Siding, L.M.S.R., carriage paid

INDEX

	PAGES
Accessories and Tools	84–87
Apron Plate	60
Axles (Back)	50–52
,, (Front)	46–49
Boiler	18–24
Boiler Mountings	28–32
Brake Gear (Hand Brake)	16
,, ,, (Hand and Foot Brake)	54
,, ,, (Hand and Foot Brake Combined)	52
,, ,, (Trailer Brakes)	68
Chassis Details	62–67
Chains	87
Cutting Tools	84
Engine	4–12
Feed Check Valve	32
Feed Pump	12–14
Feed Water Heater	26
Footplate Apron Plate and Mudguards	60–62
Frame and Mountings (Standard)	62–67
,, ,, (Tipping)	70–72
Front Axle	46–49
Funnels—Venturi	18
,, —with Damper in Base	24
,, —Venturi with Combined Blast and Blower Pipe	88
Hand Brake	16
Hand and Foot Brake	54
Hand and Foot Brake Combined	52
Injector (Hot Water)	34
,, (Sirius M.B.)	36
,, (Tipping)	77
Lighting Sets (Chain Drive)	82
,, ,, (Belt Drive)	80
Lubricator—Cylinder	38–40
,, —Chain	40
Mudguard	60
Mudguard (Tipping)	74–75
Pipes and Fittings (Standard)	56–60
,, ,, (Tipping)	76
Rear Axle	50–52
Reversing Gear	16
Safety Valve	30
Steering Gear	46–49
Stop Release and Auxiliary Valve	28
Superheater Elbow	32
Tipping Waggons (Frame and Mountings)	70–72
,, ,, (Injector)	77
,, ,, (Pipes and Fittings)	76
,, ,, (Tipping Gear)	74
,, ,, (Water Tank)	78
Tools and Accessories	87
Trailer Brake Gear	68
Valves (Feed Check)	32
,, (Safety)	30
,, (Stop Release and Auxiliary)	28
Water Level Gauge	32
Water Tank and Fittings	42–44
,, ,, ,, ,, (Tipping)	78

THE "SENTINEL" WAGGON WORKS LTD.,
SHREWSBURY, England.

Telegrams—Alley, Shrewsbury. Telephone—Shrewsbury 2011 (4 lines).

Foreign Sales Dept.—20, Iddesleigh House, Caxton Street, Westminster, S.W.1.

Telegrams—Sentnoll, London. Telephone—Victoria, 4650.

Engine

List No.	Description.	Price. s.	Price. d.	Code Word.
N.P.21	Engine Cylinder—studded	54	0	GABERDINE
N.P.22	Engine Cylinder, cleaded and studded	67	0	GABION
*N.P.23	Stud $\frac{5}{8}'' \times 4\frac{5}{8}''$ with faced nut and spring washer for fixing steam or exhaust valve chest	—	5	GABIONAGE
N.P.24	Cylinder Suspension palm stud and nut	—	5	GABIONCDE
N.P.25	Cylinder Front Cover with stud ..	6	3	GABRIEL
N.P.26	Cylinder Front Cover Plate ..	1	0	GADABOUT
N.P.27	Engine Suspension Link and Palms	17	0	GADDAN
N.P.28	Engine Suspension Link Bolt and Nut	—	10	GADDANZI
N.P.29	Steam Valve Chest—studded ..	46	6	GADDER
N.P.30	Steam Valve Chest fitted comp. ..	108	0	GADDING
N.P.31	Valve Cap Dog Stud with spring washer and faced nut	—	10	GADDISH
N.P.32	Exhaust Valve Chest—studded ..	50	0	GADFLY
N.P.33	Exhaust Valve Chest fitted comp...	114	0	GADELIC
N.P.34	Steam Branch with $\frac{1}{2}''$ gas Plug ..	8	6	GADIDAE
N.P.35	Exhaust Branch with $\frac{1}{2}''$ Gas Plug	10	6	GADININE
N.P.36	Exhaust Branch with $\frac{1}{2}''$ Coupling Nipple	11	0	GADLING
*N.P.37	$\frac{1}{2}''$ Coupling Nipple	—	7	GADIOD
*N.P.38	$\frac{1}{2}''$ Gas Plug	—	3	GADOLINIA
N.P.39	Distance Piece R.H.	36	0	GADOLIXIC
N.P.40	Distance Piece L.H.	36	0	GADOLONITE
N.P.41	Pump and Piston Rod Gland Stud	—	6	GADSDEN
N.P.42	Pump and Piston Rod Gland Nut	—	3	GADUS
N.P.43	Pump and Piston Rod Gland Spring	—	4	GADWALL
N.P.44	Distance Piece Cover	2	9	GAEKWAR
N.P.45	Piston Rod Gland Bush	2	6	GAELIC
N.P.46	Piston Rod Gland Packing (Cylinder End) .. .. (per lb.)	5	6	GAFFER
N.P.47	Piston Rod Oil Gland Packing Ring (Crank End) .. (per ring)	2	0	GAGEA
N.P.48	Piston Rod Gland Scraper Ring ..	2	3	GAGER
N.P.49	Pump and Piston Rod Gland ..	2	9	GAGGLE
N.P.50	Crosshead Guide—studded . ..	62	6	GAGLAW
N.P.51	Wrist Pin Door	—	5	GAGREIN
N.P.52	Crankcase—studded	192	6	GAHNITE
N.P.53	Crankcase—studded and fitted with Oil Sump	216	0	GAHPOSE
*N.P.54	Stud—$\frac{1}{2}'' \times 1\frac{5}{8}''$ with Spring Washer and faced nut for fixing right or left hand Main Bearings ..	—	3	GAILLARDI
N.P.55	Stud—$\frac{1}{2}'' \times 6\frac{3}{8}''$ with Spring Washer and faced nut for fixing Control Box	—	5	GAININGA
N.P.56	Cam Follower Dog Stud with Castle Nut	—	4	GAINLESS
N.P.57	Crankcase Door	3	6	GAINASAY
N.P.58	Crankcase Oil Level Cock	5	0	GAITERA
N.P.59	Crankcase Oil Sump with boss and $\frac{1}{2}''$ Gas Plug	17	0	GALACTA
*N.P.60	Plug—$\frac{1}{2}''$ Gas..	—	3	GALACTAN
N.P.61	Crankcase Oil Sump Gauze ..	3	0	GALACTASE

IT IS ESSENTIAL TO STATE WAGGON NUMBER WHEN ORDERING

Parts not illustrated are indicated by an Asterisk

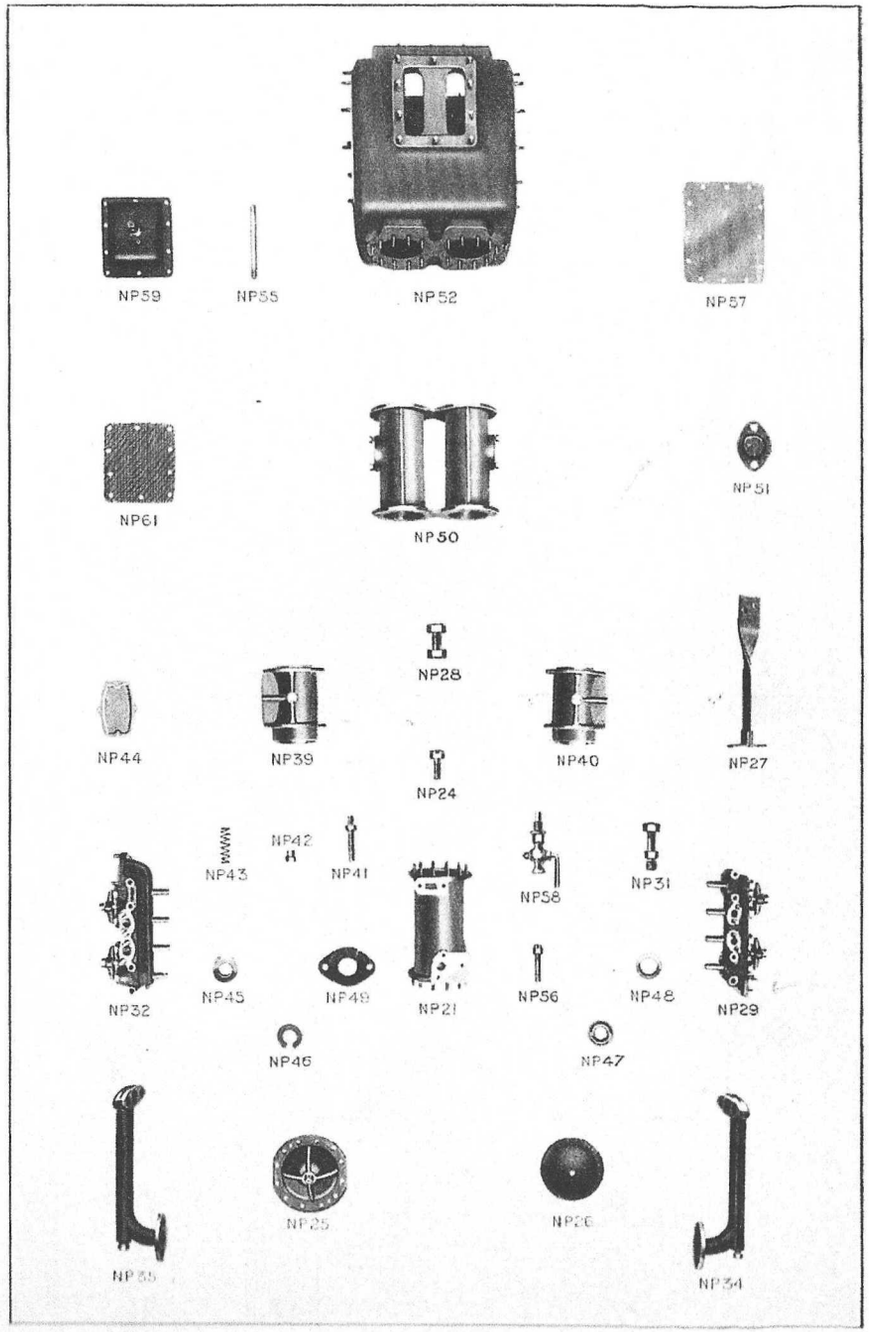

Parts not illustrated are indicated by an Asterisk

Engine (*continued*).

List No.	Description.	Price. s.	Price. d.	Code Word.
N.P.62	Piston	13	6	GALACTIA
N.P.63	Piston Ring	1	2	GALACTIC
N.P.64	Piston Rod and Nuts	35	0	GALACTJAM
N.P.65	Piston, complete with Rings and Rod	57	6	GALACTKOP
N.P.66	Crosshead Nut	1	2	GALACTO
N.P.67	Crosshead	21	6	GALACTOCER
N.P.68	Wrist Pin	12	0	GALACTOME
N.P.69	Wrist Pin Bush, L.H.	9	0	GALACTONIC
N.P.70	Wrist Pin Bush, R.H.	9	0	GALACTOPO
N.P.71	Wrist Pin Bush Pin	—	2	GALACTOR
*N.P.72	Wrist Pin Set Pin	—	4	GALACTOSE
N.P.73	Connecting Rod	31	6	GALACTOSID
N.P.74	Connecting Rod assembled comp.	105	0	GALACTURIA
N.P.77	Crank Pin Bush (Outer Half) ..	26	6	GALAGON
N.P.78	Crank Pin Bush (Inner Half) ..	23	0	GALAGUT
N.P.79	Connecting Rod Bolt with Castle Nut	5	9	GALAHAD
N.P.80	Main Bearing R.H. Bushed ..	116	9	GALANGAL
N.P.81	Main Bearing L.H. studded and bushed	156	0	GALANTHUS
*N.P.82	Plug ⅜" Gas	—	3	GALATINE
N.P.83	Main Bearing Bush, R.H.	35	6	GALANTY
N.P.84	Main Bearing Bush, L.H.	32	0	GALAPEE
N.P.85	Main Bearing Bush Pin	—	3	GALATEA
N.P.86	Gear Case Cover	1	6	GALATIAN
N.P.87	Engine Side Suspension Bracket and 1 Collar R.H.	43	6	GALAX
N.P.88	Engine Suspension Bracket Bolt and Nut	—	6	GALAXIDA
N.P.89	Suspension and Quadrant Bracket Bolt and Nut	—	10	GALAXY
*N.P.90	Grease Nipple	—	6	GALBANUM
N.P.91	Engine Side Suspension Bracket and 1 Collar L.H.	43	6	GALBULA
N.P.92	Engine Suspension Collar Bolt and Nut	—	6	GALBULIDA
N.P.93	Engine Side Suspension Collar ..	11	0	GALBULUS
N.P.94	Crankcase Oil Filler complete with Cap, Pin and Spring	11	6	GALCHA
N.P.97	Crankshaft with Crankshaft Spur Wheel and Feathers	570	0	GALEATE
N.P.98	Crankshaft complete with Differential Gear	1050	0	GALEGA
*N.P.99	Oil Pump Pin	1	0	GALENA
*N.P.100	Oil Pump Pin Washer	—	2	GALENIC
*N.P.101	Oil Pump Pin Collar	—	2	GALENICAL
N.P.102	Centre Balance Weight	15	0	GALENISM
N.P.103	Centre Balance Weight Stud with Castle Nut	2	6	GALENDBIS
N.P.105	Side Balance Weight	33	0	GALENSA
N.P.106	Side Balance Weight Bolt (long) with Castle Nut	3	3	GALENOPSIS
N.P.107	Side Balance Weight Bolt (short) with Castle Nut	3	0	GALERIC
N.P.108	Crank Shaft Spur Wheel	7	6	GALERUM
N.P.109	Crank Shaft Spur Wheel Feather	—	4	GALEUS

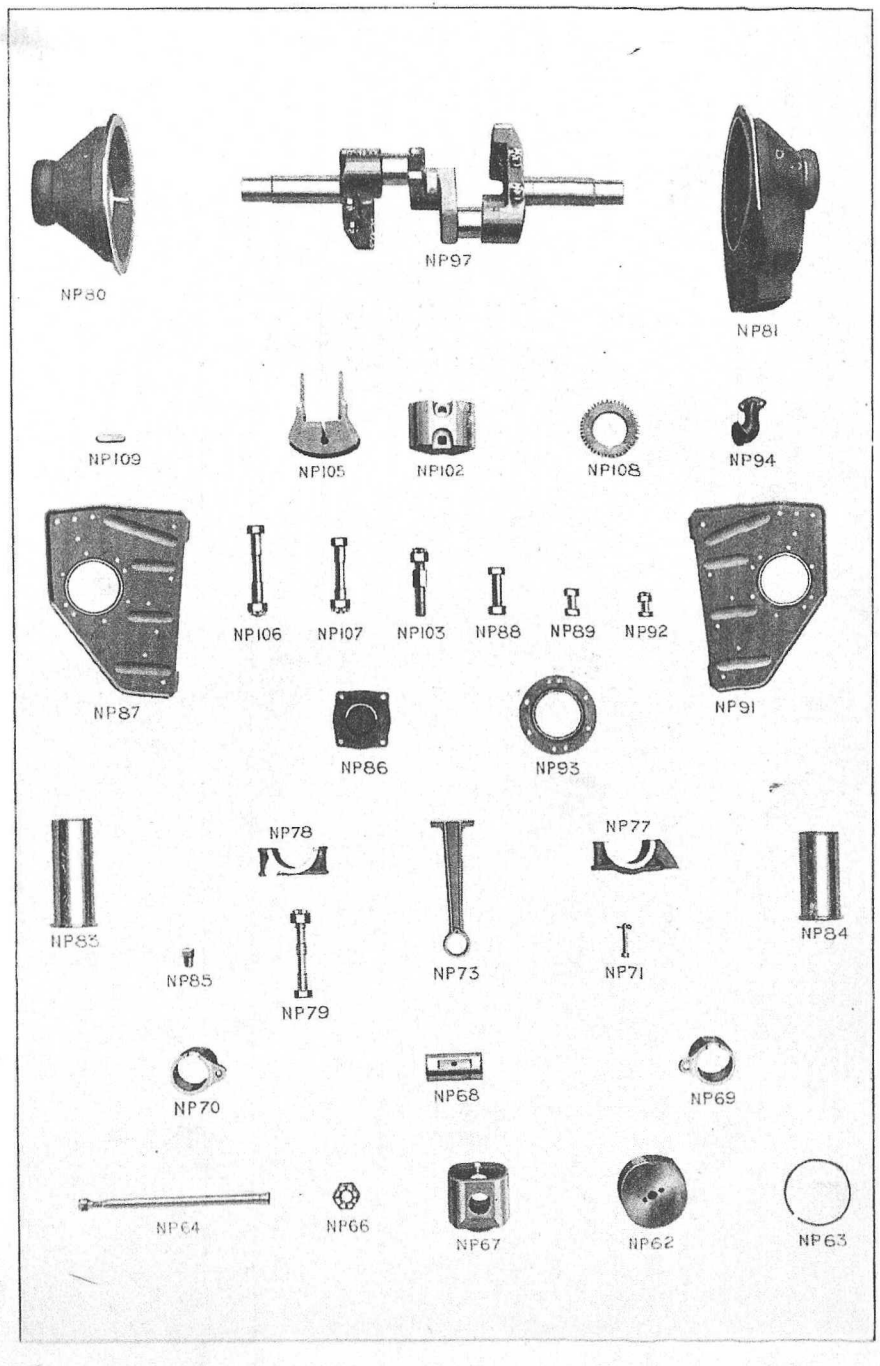

Engine (*continued*).

List No.	Description.	Price. s.	Price. d.	Code Word.
N.P.110	Intermediate Spur Ring complete	51	6	GALICIAN
N.P.111	Intermediate Gear Spindle ..	7	6	GALILEAN
N.P.112	Intermediate Gear Spindle Dog ..	2	0	GALILEE
N.P.113	Differential Shaft with two feathers and two Nuts	36	0	GALILONS
N.P.114	Feather $\frac{3}{8}'' \times \frac{5}{8}'' \times 1\frac{5}{8}''$ (Chain Pinion)	—	5	GALIMAT
N.P.115	Feather $\frac{3}{8}'' \times \frac{5}{8}'' \times 1\frac{3}{4}''$ (Master Gear)	—	5	GALIMATIS
N.P.116	Differential Shaft Bush	7	6	GALINGAL
*N.P.117	Chain Pinion bushed 11 teeth—2″ pitch	85	0	GALIOT
*N.P.118	Chain Pinion bushed 13 teeth—2″ pitch	85	0	GALIUM
*N.P.119	Chain Pinion bushed 15 teeth—2″ pitch	85	0	GALLAB
*N.P.120	Chain Pinion bushed 17 teeth—2″ pitch	85	0	GALLAC
N.P.121	Chain Pinion bushed 11 teeth—$1\frac{3}{4}''$ pitch	85	0	GALLACETO
N.P.122	Chain Pinion bushed 13 teeth—$1\frac{3}{4}''$ pitch	85	0	GALLANOL
N.P.123	Chain Pinion bushed 15 teeth—$1\frac{3}{4}''$ pitch	85	0	GALLANT
N.P.124	Chain Pinion bushed 17 teeth—$1\frac{3}{4}''$ pitch	85	0	GALLANTRY
N.P.125	Chain Pinion bushed 19 teeth—$1\frac{3}{4}''$ pitch	85	0	GALLAPPLE
*N.P.126	Chain Pinion Bush	17	6	GALLATE
N.P.127	Oil Retaining Gland	11	6	GALLEAS
N.P.128	Oil Retaining Gland Spring ..	1	6	GALLEIN
N.P.129	Oil Retaining Gland Washer ..	1	4	GALLEONO
N.P.130	Oil Retaining Gland Washer Spring	—	3	GALLERY
*N.P.131	Oil Retaining Gland complete ..	14	6	GALLETA
N.P.132	Master Gear	27	0	GALLEYHAF
N.P.134	Differential Pinion Feather ..	—	3	GALLFLOW
*N.P.135	Differential Pinion Nut	—	8	GALLFLOWER
N.P.136	Differential Pinion, complete with head, nut and feather	51	0	GALLFLY
N.P.137	Retaining Bush	2	0	GALLFUNG
N.P.139	Differential Pinion Head Bush ..	4	3	GALLIBACE
N.P.140	Differential Pinion Bush	9	0	GALLIBUS
N.P.141	Differential Wheel	14	0	GALLIARD
N.P.147	Steam Camshaft	98	0	GALLICO
N.P.149	Exhaust Camshaft	98	0	GALLIFICA
N.P.150	Cam Shaft Bush	5	6	GALLIFOR
N.P.151	Cam Shaft Spur Wheel	8	6	GALLIFORM
N.P.152	Cam Shaft Spider	12	6	GALLIGAS
N.P.153	Cam Shaft Spider Pins	1	3	GALLIGASKI
*N.P.154	Cam Shaft Spider Bolt with Castle Nut	—	6	GALLIMAU
N.P.155	Cam Shaft Finger	8	0	GALLIMAUFI
N.P.156	Control Shaft with Castle Nuts and Split Pins	15	0	GALLINA
N.P.157	Control Box, Studded	29	6	GALLINAC
N.P.158	Control Box Cover	1	3	GALLING
N.P.159	Control Lever with Castle Nut and Split Pin	5	6	GALLINU
N.P.160	Control Box Dust Cover—front half	4	6	GALLINULA
N.P.161	Control Box Dust Cover—rear half	4	6	GALLIO

IT IS ESSENTIAL TO STATE WAGGON NUMBER WHEN ORDERING

Parts not illustrated are indicated by an Asterisk

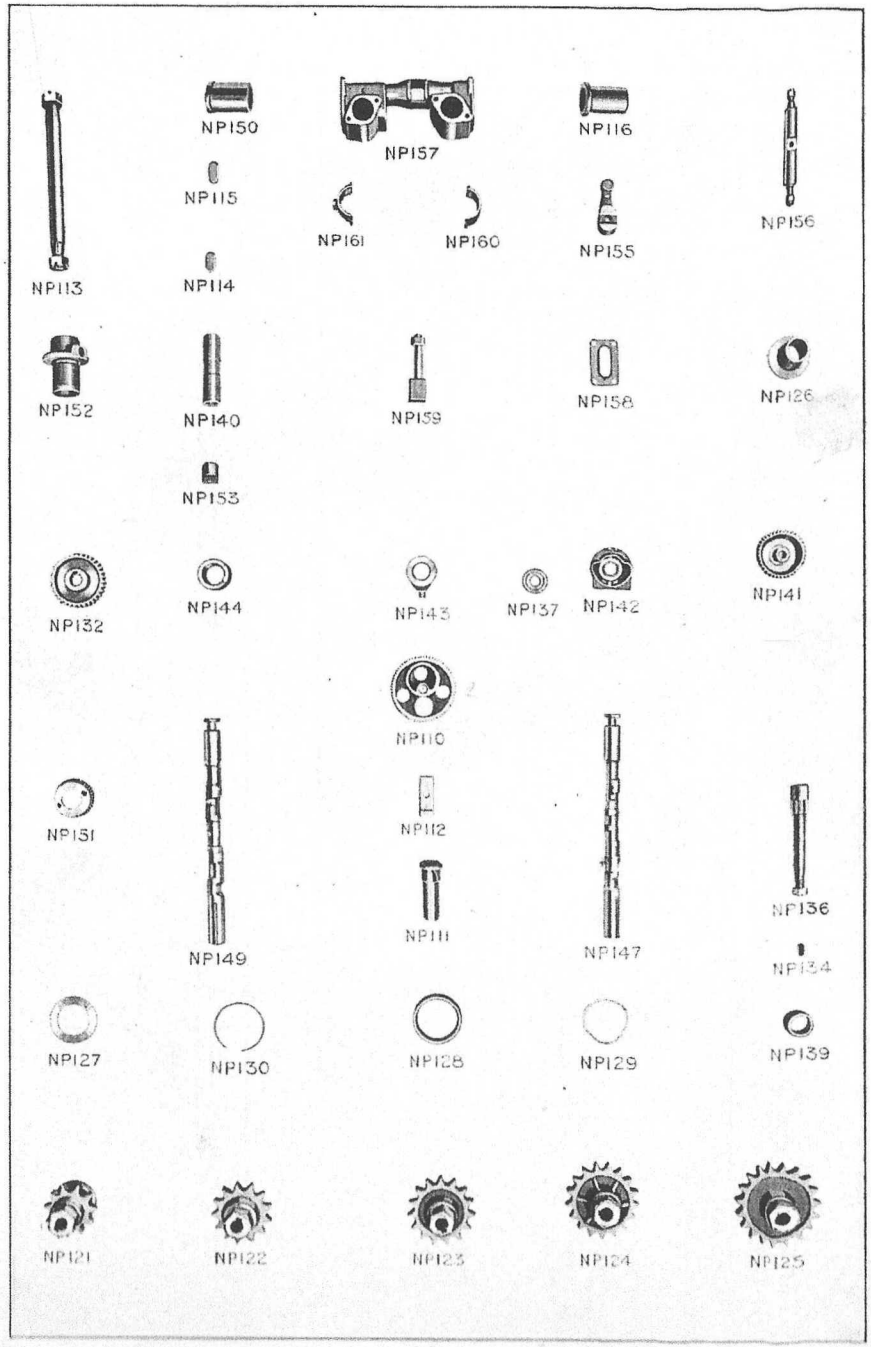

Parts not illustrated are indicated by an Asterisk

Engine (*continued*).

List No.	Description.	Price. s.	Price. d.	Code Word
N.P.162	Cam Follower	3	9	GALLIPORAN
N.P.163	Cam Follower Guide	3	9	GALLIPOLI
N.P.164	Cam Follower Gland	1	0	GALLIPOT
*N.P.165	Cam Follower Gland Packing $\frac{3}{16}''$ .. .. (per lb)	3	6	GALLIPUM
N.P.166	Cam Follower Guide Dog	1	0	GALLIRET
N.P.167	Cam Follower Gland Lock	—	3	GALLIVANT
N.P.168	Steam Valve Push Rod	1	2	GALLIVATE
N.P.169	Exhaust Valve Push Rod	1	2	GALLIWASP
N.P.170	Push Rod Adjuster	2	0	GALLIZE
N.P.171	Valve Stem Pad	—	4	GALLUSE
N.P.172	Push Rod Adjuster Nut	—	4	GALLMITE
*N.P.173	Steam Valve Push Rod complete	4	0	GALLMOTH
*N.P.174	Exhaust Valve Push Rod complete	4	0	GALLNUTE
N.P.175	Valve Stem	—	10	GALLOAK
N.P.176	Steam Valve	3	0	GALLOBRO
N.P.177	Exhaust Valve	4	0	GALLOFLA
N.P.178	Steam Valve Guide	3	0	GALLOMA
N.P.179	Exhaust Valve Guide	3	9	GALLODN
N.P.180	Steam Valve Spring	—	5	GALLOP
N.P.181	Exhaust Valve Spring	—	7	GALLOPADE
N.P.182	Steam Valve Cap	—	9	GALLOPING
N.P.183	Exhaust Valve Cap	—	10	GALLOW
N.P.184	Steam and Exhaust Valve Cap Dog	1	0	GALLSTO
N.P.185	Push Rod Spring	—	6	GALLSUS
N.P.186	Push Rod Spring Casing	1	8	GALOIS
N.P.187	Push Rod Spring Seat	—	1	GALORE
N.P.188	Cylinder Drain Valve Body ..	2	3	GALOSH
N.P.189	Cylinder Drain Valve	1	10	GALTON
N.P.190	Cylinder Drain Valve Lever Bracket	1	2	GALVANIC
N.P.191	Cylinder Drain Valve Lever ..	—	10	GALVANIZE
N.P.192	Cylinder Drain Valve Lever Pin with two Split Pins	—	6	GALVANO
N.P.193	Cylinder Drain Valve Lever Spring	—	2	GAMAS
*N.P.194	Cylinder Drain Valve fitted up complete	8	0	GAMBA
N.P.195	Cylinder Drain Gear Control Lever	1	6	GAMBADO
N.P.196	Cylinder Drain Gear Control Bracket	1	2	GAMBEAN
*N.P.197	Cylinder Drain Control Lever Stop	—	6	GAMBESON
N.P.198	Cylinder Drain Gear Friction Washer	—	2	GAMBEER
N.P.199	Cylinder Drain Gear Lever Spring	—	4	GAMBITE
*N.P.200	Cylinder Drain Gear Control fitted complete	6	0	GAMBLE
N.P.201	Cylinder Drain Gear Pulley Hanger	—	10	GAMBLING
N.P.202	Cylinder Drain Gear Pulley ..	—	6	GAMBOGE
N.P.203	Cylinder Drain Gear Pulley Pin with Split Pins	—	2	GAMBOISE
*N.P.204	Cylinder Drain Gear Pulley complete	2	0	
N.P.205	Cylinder drain valve cable	—	7	GAMBOL
N.P.206	Cylinder Drain Valve Cable Clamp with washer and wing nut ..	—	3	GAMBREL GAMBRIN

IT IS ESSENTIAL TO STATE WAGGON NUMBER WHEN ORDERING

Parts not illustrated are indicated by an Asterisk

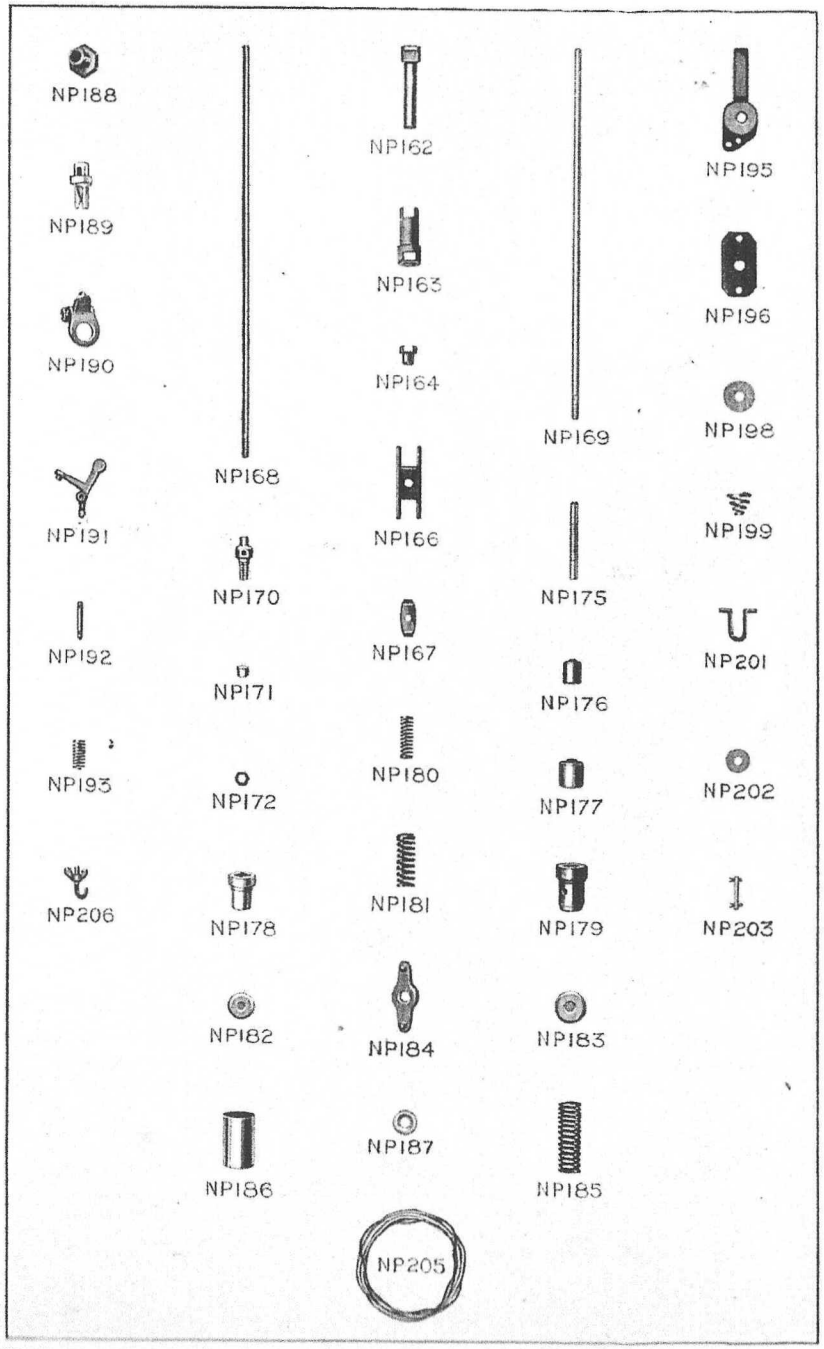

Parts not illustrated are indicated by an Asterisk

Engine Joints

List No.	Description.	Price. s.	Price. d.	Code Word.
*N.P.207	Joint—cylinder cover	—	7	GAMBRON
*N.P.208	Joint—steam valve chest to cylinders	—	3	GAMEBAL
*N.P.209	Joint—exhaust valve chest to cylinders	—	3	GAMECOY
*N.P.210	Joint—steam branch to cylinders	—	4	GAMEHAW
*N.P.211	Joint—exhaust branch to cylinders	—	4	GAMEKEP
*N.P.212	Joint—steam branch to steam valve chest	—	3	GAMELAW
*N.P.213	Joint—exhaust branch to exhaust valve chest	—	4	GAMELYD
*N.P.214	Joint—oil filler to crankcase ..	—	4	GAMENES
*N.P.215	Joint—control box cover	—	4	GAMESON
*N.P.216	Joint—gear case cover	—	7	GAMESTER
*N.P.217	Joint—crankcase door	2	3	GAMETAL
*N.P.218	Joint—wrist pin door	—	4	GAMETANG
*N.P.219	Joint—crankcase oil level cock ..	—	4	GAMETE
*N.P.220	Joint—crankcase oil sump ..	2	3	GAMETOP
*N.P.221	Joint—distance piece cover ..	—	6	GAMETUCK

Feed Pump

List No.	Description.	Price. s.	Price. d.	Code Word.
N.P.300	Feed Pump Body—studded and fitted with Pump Neck Ring ..	49	6	GEANTIC
N.P.301	Pump Gland	2	9	GEARINT
N.P.302	Pump Gland Stud	—	6	GEARLESK
N.P.303	Pump Gland Nut	—	3	GEASTER
N.P.304	Pump Gland Bush	2	8	GEBANG
N.P.305	Pump Gland Spring..	—	4	GECAKO
N.P.306	Pump Stuffing Box End Cover ..	3	6	GECKAN
N.P.307	Pump Ram Neck Ring	3	6	GECKONID
N.P.308	Pump Body End Cover	1	8	GEEBUNG
N.P.309	Pump Body Door	1	1	GEESTLAN
N.P.310	Pump Body Door Stay Bolt with Spring Washer and Nut ..	—	3	GEEZER
N.P.311	Pump Ram	27	6	GEHENNA
N.P.312	Pump Wrist Pin	3	0	GEIGER
N.P.313	Pump Packing .. (per lb.)	7	6	GEIKIA
N.P.314	Feed Pump Eccentric Strap ..	12	6	GEISHA
N.P.315	Pump Valve Chest	43	0	GEITON
*N.P.316	Coupling Nipple—delivery & by-pass	4	6	GELADA
N.P.317	Coupling Nipple—suction pipe ..	5	9	GELALAN
N.P.318	Feed Pump Air Chamber with Gas Plug..	20	0	GELANT
*N.P.319	Plug ½" Gas	—	3	GELASI
N.P.320	Byepass Valve	7	3	GELASIAM
N.P.321	Byepass Valve Seat	2	9	GELASTIC
N.P.322	Byepass Valve Spring	—	5	GELATIGE
N.P.323	Byepass Valve Cap	2	0	GELATINO
N.P.324	Byepass Valve Packing Washer ..	—	1	GELATINIF
*N.P.325	Byepass Valve Packing Spring ..	—	2	GELATINOB
N.P.326	Pump Check Valve Plug	3	0	GELATION
N.P.327	Pump Check Valve Stopper ..	2	3	GELATOSE
N.P.328	Pump Check Valve	1	6	GELDINGA
N.P.329	Byepass Valve Lever	1	0	GELID
N.P.330	Byepass Valve Lever Pin with Split Pins	—	6	GELIGIT
N.P.331	Pump Control Rope Bolt with Spring Washer and Wing Nut	—	2	GELOSE

IT IS ESSENTIAL TO STATE WAGGON NUMBER WHEN ORDERING

Parts not illustrated are indicated by an Asterisk

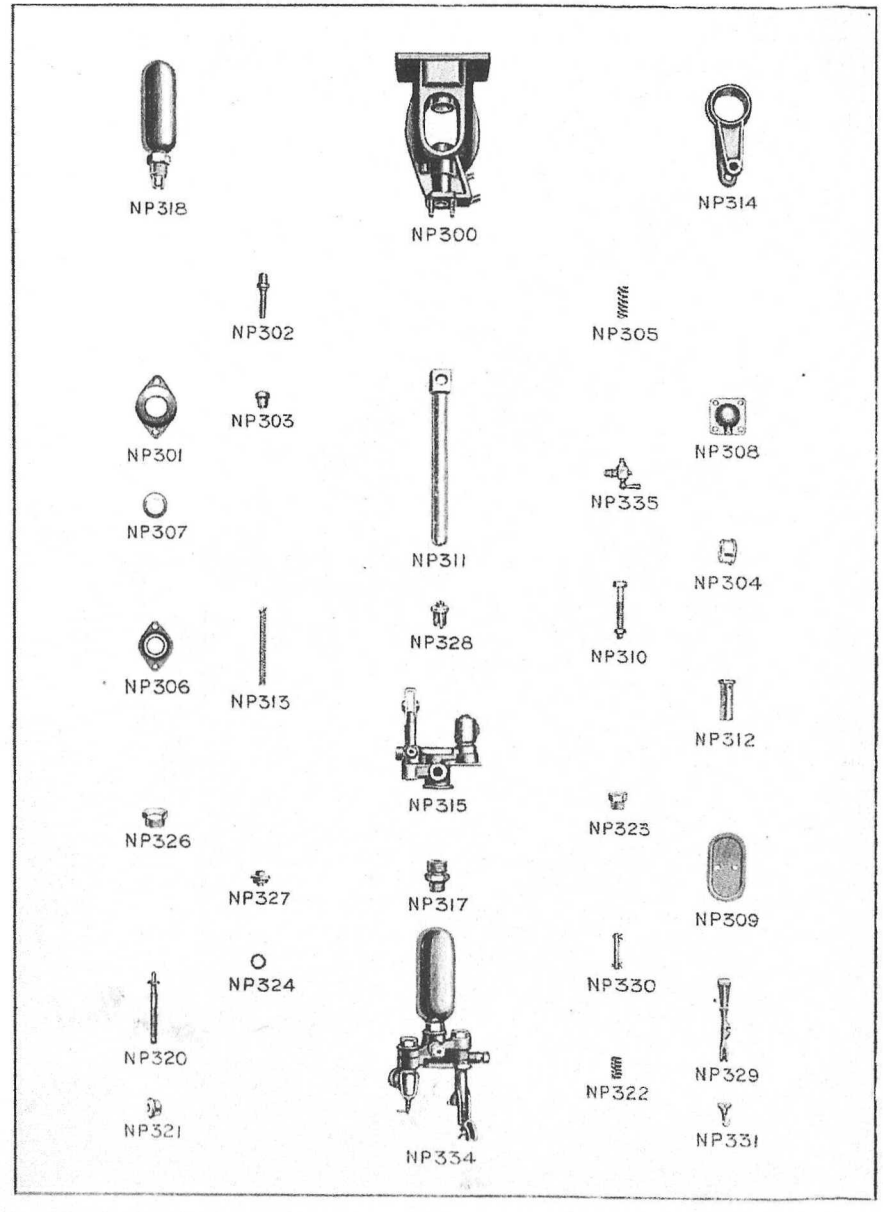

Feed Pump (*continued*).

List No.	Description.	Price. s.	Price. d.	Code Word.
*N.P.332	Byepass Valve Packing (per lb.)	5	6	GELSEM
*N.P.333	Pump Body fitted complete ..	130	0	GEMARA
N.P.334	Pump Valve Chest fitted up complete	104	0	GEMARIC
N.P.335	Cock "Rotherham" No. 20 ¼" Gas	1	3	GEMELOS
N.P.336	Byepass Valve Control Handle ..	1	0	GEMELUT
N.P.337	Control Handle Pulley	—	3	GEMINAT
N.P.338	Control Handle Pulley Pin with Split Pin	—	2	GEMINI
N.P.339	Byepass Valve Control Bracket ..	1	0	GEMINKAL
N.P.340	Control Handle Washer	—	2	GEMMA
N.P.341	Control Spring	—	4	GEMMATE
N.P.342	Byepass Valve Handle fitted complete	5	9	GEMMIN
N.P.343	Byepass Valve Pulley Bkt. comp.	2	9	GEMMINGI
N.P.344	Byepass Valve Pulley Bracket ..	—	11	GEMMIPAR
N.P.345	Byepass Valve Control Pulley ..	—	8	GEMMULAT
N.P.346	Control Pulley Pin with Split Pin	—	2	GEMMY
N.P.347	Pulley Bracket Support Plate ..	—	8	GEMSBOK
*N.P.349	Pump Control Cable (½" Wire Rope)	1	3	GEMSHOR
N.P.350	Joint—Pump Body to L.H. Main Bearing	1	0	GEMTOT
N.P.351	Joint—Pump Body End Cover to Pump Body	—	7	GEMTOPS
N.P.352	Joint—Pump Valve Chest to Pump Body	—	7	GEMUSON

IT IS ESSENTIAL TO STATE WAGGON NUMBER WHEN ORDERING

Parts not illustrated are indicated by an Asterisk

Steam Waggons

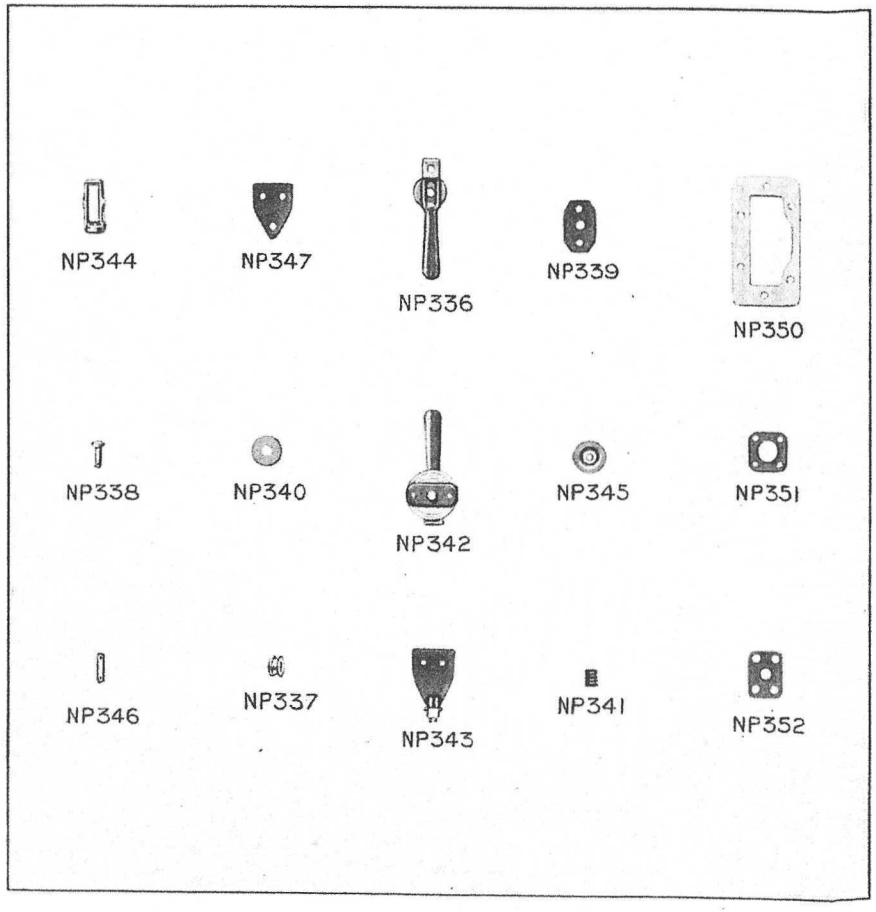

Parts not illustrated are indicated by an Asterisk

Hand Brake Column and Reversing Gear

List No.	Description.	Price. s.	Price. d.	Code Word.
N.P.360	Hand Brake Column—studded ..	48	6	GEOCAR
N.P.361	Hand Brake Column Cover ..	1	0	GEOCARPIC
N.P.362	Plug—$\frac{1}{2}$″ Gas..	—	3	GEOCEN
N.P.363	Hand Brake Screw Bearing ..	11	0	GEOCENTRIC
N.P.364	Hand Brake Screw with No. 11 Woodruff Key, Spring Washer and Faced Nut	16	9	GEOCHRO
N.P.365	Hand Brake Hand Wheel with Handle	15	0	GEOCYC
N.P.366	Hand Brake Screw Nut	12	6	GEOCYCLIC
N.P.367	Hand Brake Waist Pin	2	0	GEODE
N.P.368	Hand Brake Shaft Top Lever ..	6	6	GEODESIC
N.P.369	Hand Brake Shaft with 2 Castle Nuts and 2 Split Pins	11	9	GEODESIST
N.P.370	Hand Brake Shaft Bottom Lever	5	0	GEODESY
N.P.371	Reversing and Brake Bracket ..	25	0	GEODET
N.P.372	Bolt—Fitted hex. $\frac{11}{16}$″ × $1\frac{3}{4}$″ with Spring Washer and Faced Nut	—	6	GEODETIC
N.P.373	Bolt—Fitted hex. $\frac{11}{16}$″ × $2\frac{1}{4}$″ with Spring Washer and Faced Nut..	—	7	GEODIC
N.P.374	Reversing Weigh Shaft	11	0	GEODIFER
N.P.375	Reversing Weigh Shaft Lever with Castle Nut and Split Pin ..	5	0	GEOFFRA
N.P.376	Reversing Lever with Castle Nut and Split Pin	4	9	GEOGEN
N.P.377	Reversing Quadrant Fixing Bracket	1	7	GEOGLOS
N.P.378	Pin—$\frac{3}{8}$″ × $1\frac{3}{4}$″ Fixing Bracket to Reversing Lever	—	2	GEOGNOST
N.P.379	Reversing Quadrant	4	9	GEOGNOSTIC
N.P.380	Reversing Quadrant Index Plate	2	9	GEOGONY
*N.P.381	Reversing Quadrant Locating Ball	—	4	GEOGONIC
N.P.382	Reversing Quadrant Ball Spring ..	—	1	GEOGRAPH
N.P.383	Reversing Quadrant Locating Brkt.	3	0	GEOHY
N.P.384	Reversing Rod End..	3	6	GEOHYDRO
N.P.385	Reversing Rod End Pin with 2 Split Pins	3	9	GEOID
N.P.386	Reversing Rod with 2, $\frac{5}{8}$″ Faced Nuts	4	0	GEOLAT
*N.P.387	Reversing Rod, complete	19	0	GEOLOG
*N.P.388	Hand Brake Column Cover Joint	—	2	GEOLOGIC
*N.P.389	Reversing Rod Guide	4	6	GEOLOHIM
*N.P.390	Brake Rod Guide	1	3	GEOLOJOP

IT IS ESSENTIAL TO STATE WAGGON NUMBER WHEN ORDERING

Parts not illustrated are indicated by an Asterisk

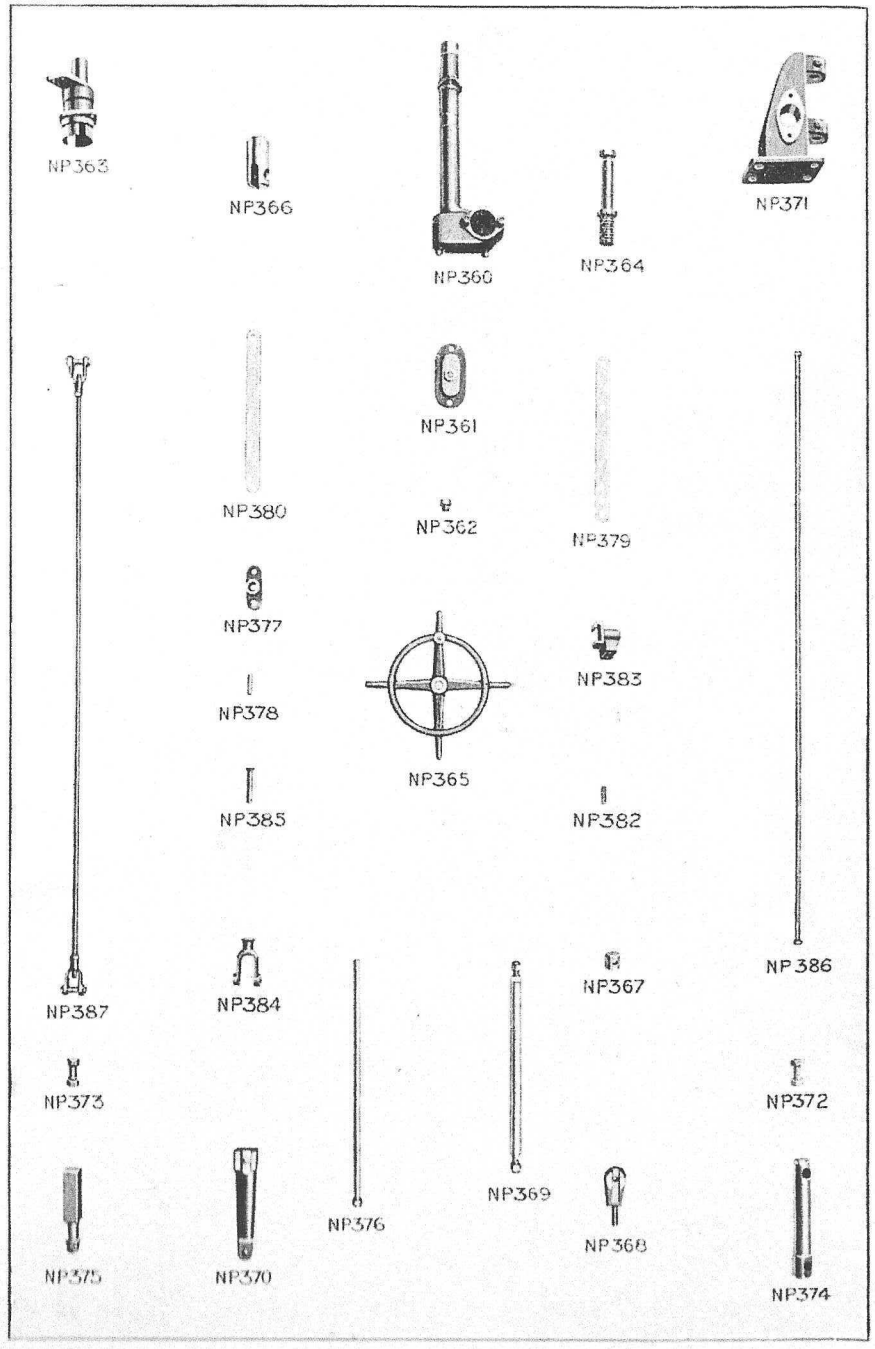

Parts not illustrated are indicated by an Asterisk

Boiler

List No.	Description	Price. s.	Price. d.	Code Word.
N.P.400	Boiler with two Washout Patches and One Filler, Patches attached and tapped for plugs	1860	0	GLADIATE
N.P.401	Firebox, complete with all Tubes and Studs	1060	0	GLADIATOR
N.P.402	Outer Shell only	647	6	GLADSTOP
N.P.403	Boiler Tubes, one complete set, comprising 10 long tubes, 10 intermediate and 10 short ..	104	6	GLADIFAN
N.P.404	Boiler Tube, long	4	6	GLADIOLUS
N.P.405	Boiler Tube, intermediate ..	3	9	GLADNEST
N.P.406	Boiler Tube, short	2	9	GLADSHIP
N.P.407	Boiler Stud Cap Nut and Top complete	—	4	GLADSOAP
*N.P.407A	Nut for $\frac{5}{8}''$ Boiler Stud	—	1	GLADSOB
*N.P.408A	Boiler Stud, $2\frac{1}{4}''$ long per doz.	3	0	GLADSOFT
*N.P.408B	Boiler Stud, $2\frac{3}{8}''$ long ,,	3	6	GLADSOLE
*N.P.408C	Boiler Stud, $2\frac{3}{4}''$ long ,,	4	0	GLADSOOT
*N.P.408D	Boiler Stud, $3\frac{3}{16}''$ long ,,	4	6	GLADSPUD
N.P.409	Boiler Tube Special Ferrules ..	8	3	GLADSTONE
N.P.410	Hand Hole Door with Bolt and Clamp complete	21	0	GLAFCART
N.P.414	Venturi Funnel, complete with Base, Coping and Damper	127	0	GLAFCUNY
N.P.415	Funnel Base, Studded	31	9	GLAFDACE
N.P.416	Venturi Funnel only	20	0	GLAFDENT
N.P.417	Funnel Outer Casing	14	0	GLAFDISC
N.P.418	Funnel Coping, with Bosses ..	12	6	GLAFDOCK
*N.P.419	Distance Piece	—	2	GLAFDUD
N.P.420	Funnel Damper Bracket	1	0	GLAFGOJ
N.P.423	Funnel Damper Handle	1	3	GLAFJAM
N.P.425	Funnel Damper Shaft	1	6	GLAFJIP
N.P.426	Funnel Damper Shaft Collar ..	—	2	GLAFJOE
N.P.428	Damper Shaft Spring	—	1	GLAFKEM
N.P.432	Spark Arrester, complete	11	6	GLAFLAXO
N.P.433	Funnel Damper, complete with boss	6	0	GLAFLEG
N.P.436	Blast Pipe Bend	8	0	GLAFLUX
N.P.437	Blast Pipe	6	6	GLAFMAF
N.P.438	Blast Nozzle	3	6	GLAFMES
N.P.439	Boiler Stud Cover	14	0	GLAFMOP
N.P.440	Brass Nuts, $\frac{5}{8}''$ .. Per doz.	3	6	GLAFMUT

IT IS ESSENTIAL TO STATE WAGGON NUMBER WHEN ORDERING

Parts not illustrated are indicated by an Asterisk

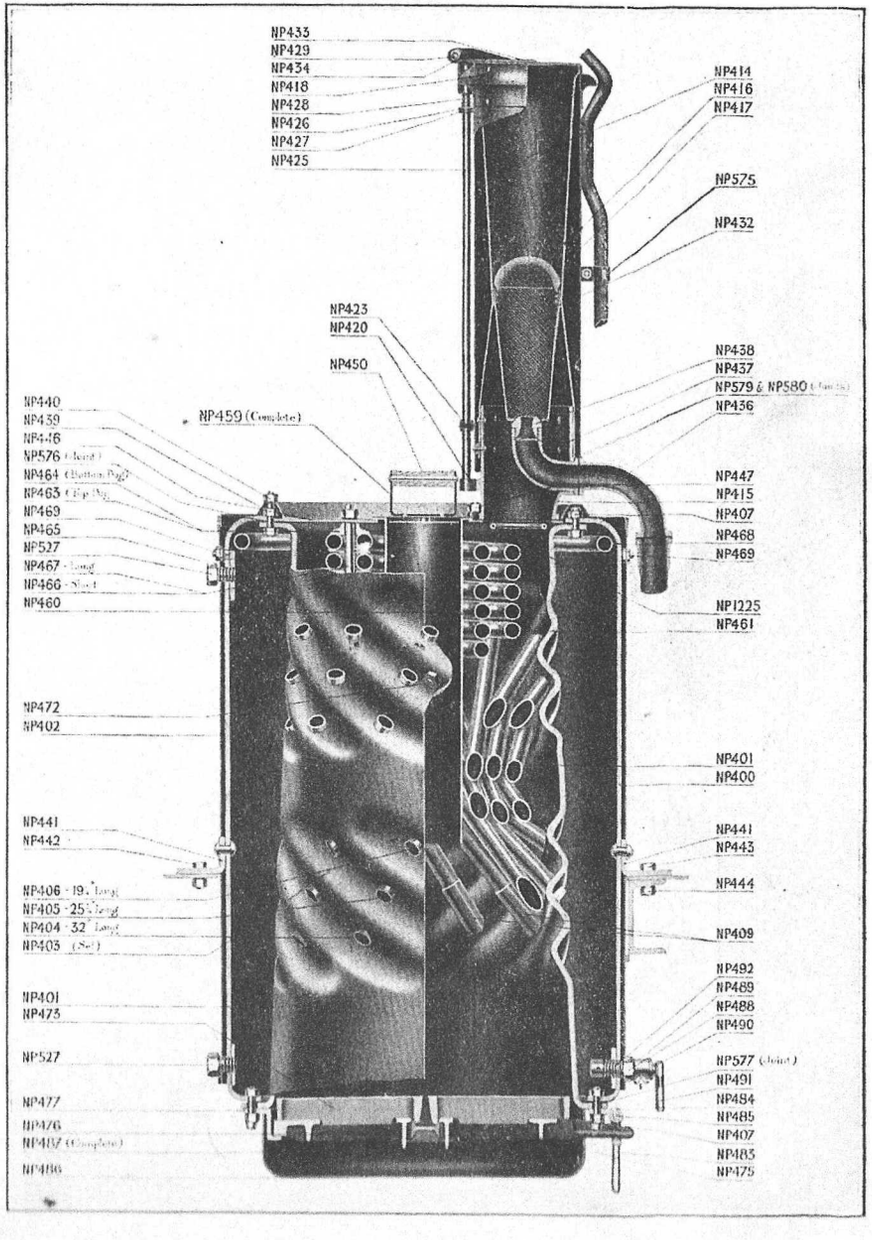

Parts not illustrated are indicated by an Asterisk

Boiler (*continuea*).

List No.	Description.	Price. s.	Price. d.	Code Word.
N.P.446	Boiler Top, studded	24	6	GLAGOLIT
N.P.447	Stud, $\frac{1}{2}'' \times 1\frac{3}{4}''$, fixing Base with $\frac{1}{2}''$ Spring Washer and Faced Nut	—	3	GLAGOLITIC
N.P.448	Superheater Steady Plate	—	6	GLAGUMP
N.P.449	Set Pin, $\frac{3}{8}'' \times \frac{3}{4}''$ with $\frac{3}{8}''$ Spring Washer	—	4	GLAIKAB
N.P.450	Furnace Door Handle	—	7	GLAIRER
N.P.459	Furnace Door complete	6	0	GLANGEPIL
N.P.460	Stoking Shoot	15	0	GLANDCELL
N.P.461	Superheater Coil and End Flanges ..	198	0	GLANDERS
*N.P.462	Joint Washer, $1\frac{1}{8}''$	—	2	GLANDEROUS
N.P.463	Superheater Top Dog	—	4	GLANDULAR
N.P.464	Superheater Bottom Dog	—	4	GLANDULE
N.P.465	Superheater Packing Piece ..	—	2	GLANDULUS
N.P.466	Superheater Coil Bolt—short with Faced Nut and Black Washer ..	—	9	GLANDVAT
N.P.467	Superheater Coil Bolt—long with Faced Nut and Black Washer ..	—	9	GLAREOLA
N.P.468	Steam Collector Pipe	16	0	GLARINGLY
N.P.469	Collector Pipe Hook Bolt with special Washer, Black Washer and Faced Nut	2	0	GLASERINA
*N.P.470	Check Valve Baffle Plate	1	3	GLASSBLOW
N.P.472	Fusible Plug	2	0	GLASSCULT
N.P.473	Firegrates (set) Cold Blast Iron ..	38	0	GLASSCUSK
N.P.473A	Firegrates (set) Good Cast Iron ..	22	0	GLASSDUP
N.P.475	Front Firegrate Trunnion ..	18	0	GLASSEYE
N.P.476	Rear Firegrate Trunnion	14	9	GLASSFUL
N.P.477	Rear Firegrate Trunnion Bracket	1	6	GLASSGAL
N.P.478	Firegrate Trunnion Lever ..	2	0	GLASSGAZE
N.P.479	Firegrate Trunnion Lever Quadrant	2	6	GLASSHOSE
N.P.482	Firegrate Trunnion Bracket ..	2	3	GLASSMET
N.P.483	Firegrate Trunnion Clip	2	6	GLASSNAIL
N.P.484	Firegrate Trunnion Clip Bracket ..	1	0	GLASSNOT
N.P.485	Firegrate Trunnion Clip Pin with Split Pin	—	4	GLASSOVEN
N.P.486	Ashpan only	21	0	GLASSPEX
N.P.487	Ashpan comp., with Hinges and Hook	30	0	GLASSPIG
N.P.488	Blow off Valve Chest	9	6	GLASSWAG
N.P.489	Blow off V. Chest Spring Clip ..	—	8	GLASSWED
N.P.490	Blow off Valve Spindle	13	6	GLASSWIND
N.P.491	Blow off Valve Handle	—	9	GLASSZINK
N.P.492	Blow off Valve Chest fitted up complete	26	0	GLASSZONE
N.P.500	Pressure Gauge Nipple (India Boilers) not illustrated	2	6	GLATAEL

IT IS ESSENTIAL TO STATE WAGGON NUMBER WHEN ORDERING

Parts not illustrated are indicated by an Asterisk

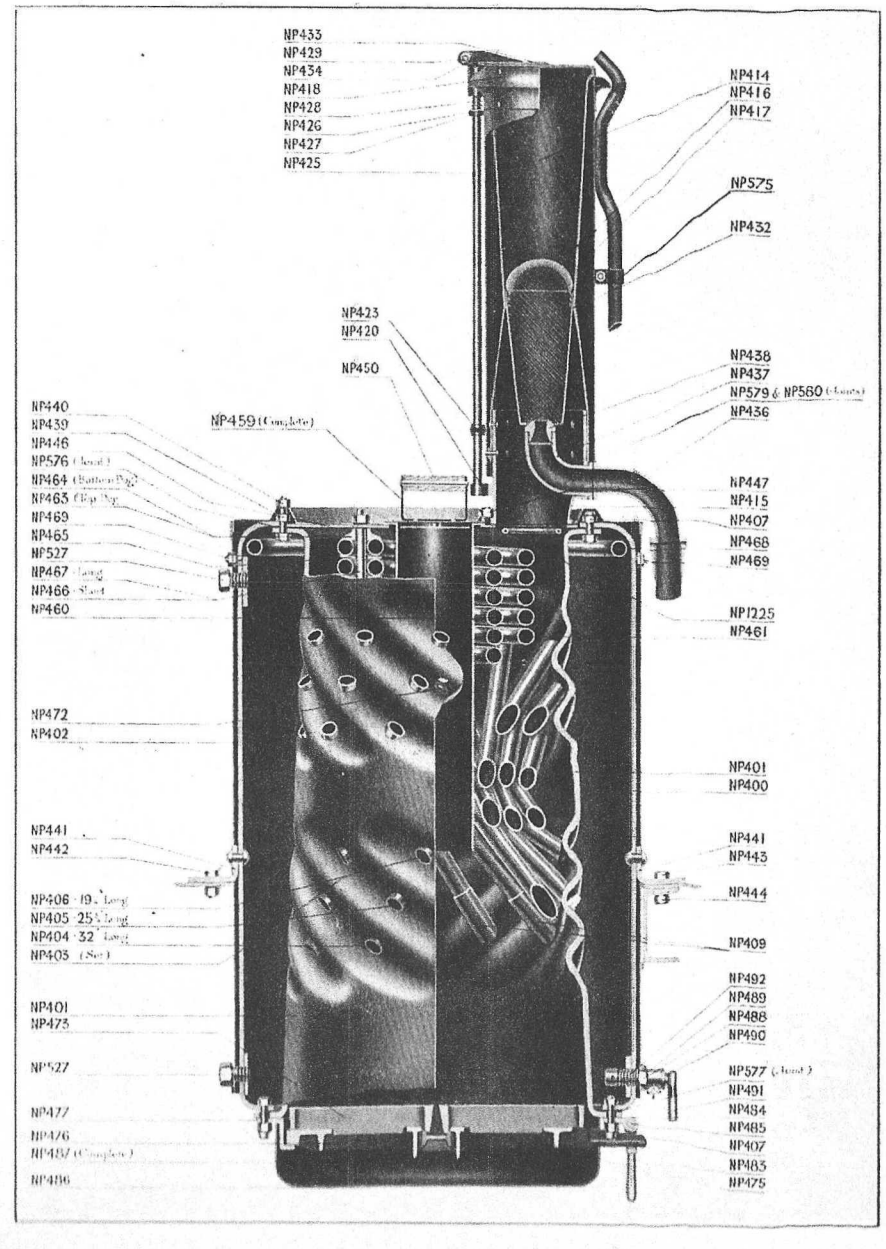

Parts not illustrated are indicated by an Asterisk

Boiler (*continued*).

List No.	Description.	Price. s.	Price. d.	Code Word.
N.P.501	Steam to Aux. Valve Tee Piece	3	9	GLATAME
N.P.502	Globe Valve, ½″ Female	15	0	GLATING
N.P.503	Ashpan Hook	1	0	GLATOUS
N.P.505	Ashpan Hinge, R.H.	1	6	GLAUBERITE
N.P.506	Ashpan Hinge, L.H.	1	6	GLAUCENS
*N.P.507	Ashpan Hinge Bracket, R.H. ..	1	0	GLAUCESCEN
*N.P.508	Ashpan Hinge Bracket, L.H. ..	1	0	GLAUCIDIUM
N.P.509	Ashpan Hinge Bracket Bolt, with Nuts and Split Pins	1	3	GLAUCODOT
N.P.510	Ashpan Lifting Rod	1	0	GLAUCOMA
N.P.511	Ashpan Quadrant Bracket ..	5	6	GLAUCONIA
N.P.513	Ashpan Quadrant	2	6	GLAUCOPANE
N.P.515	Ashpan Lifting Arm	1	6	GLAVER
N.P.516	Ashpan Lifting Arm Fulcrum Pin with Spring Washer, Bright Washer, Faced Nut and Split Pin	1	0	GLAZOM
N.P.517	Ashpan Hand Lever	2	3	GLEANING
N.P.519	Ashpan Ratchet Pawl	—	6	GLADITSIA
N.P.520	Ashpan Ratchet Pawl Spring ..	—	2	GLEECLUB
N.P.521	Push Rod	1	0	GLEEFUL
N.P.522	Push Rod—Bottom End	—	6	GLEEFULLY
N.P.523	Push Rod—Top End	—	6	GLEEMAN
N.P.524	Set Pin, ⅝″×2″, with Washer and Nut, fixing Stop Valve to Boiler	—	8	GLEESOME
*N.P.525	Set Pin, ½″×1⅝″, with Washer and Nut, fixing Boiler Mountings ..	—	5	GLENCARRI
N.P.526	Stud, ½″×1¾″, with Faced Nut, fixing Safty Valve	—	3	GLENOID
N.P.527	Filling or Washout Plug, 1¼″ Gas ..	3	6	GLICALL
N.P.528	Cleaning Pipe Nipple	—	9	GLIADIN
*N.P.529	Boiler Cleaning Valve, complete ..	19	6	GLIBBERY
*N.P.529A	Boiler Cleaning Valve only ..	2	9	GLIBBIER
*N.P.529B	Boiler Cleaning Valve Seat only ..	1	9	GLIBBOY
*N.P.530	Coupling Nipple, ½″ to ¾″	—	8	GLIDDER
*N.P.531	Blind Nut, ¾″	1	0	GLIDELESS
*N.P.532	Boiler Cleaning Valve with Coupling Nipple and Blind Nut	23	0	GLIDING
N.P.533	Stop Valve Chest	43	6	GLIMMER
N.P.534	Coupling Nipple, ½″ to ¾″ Steam to Aux. Valve	—	8	GLIMMERING
N.P.535	Stop Valve Chest Cover	18	9	GLIMPSE
N.P.536	Release Valve Chest—studded ..	14	0	GLIOMATO
*N.P.537	Coupling Nipple, 1″	1	6	GLIOMATOXI
*N.P.538	Stud, ½″×2″, with Spring Washer and Faced Nut for fixing Main Steam Pipe	—	4	GLIOSIS
*N.P.542	Pressure Gauge	33	6	GLISSONS
*N.P.543	Pressure Gauge Globe Valve ..	22	6	GLISTEN
*N.P.544	½″ Coupling Nipple	—	7	GLITTER
*N.P.545	Test Gauge Adaptor	2	6	GLOAMING

IT IS ESSENTIAL TO STATE WAGGON NUMBER WHEN ORDERING

Parts not illustrated are indicated by an Asterisk

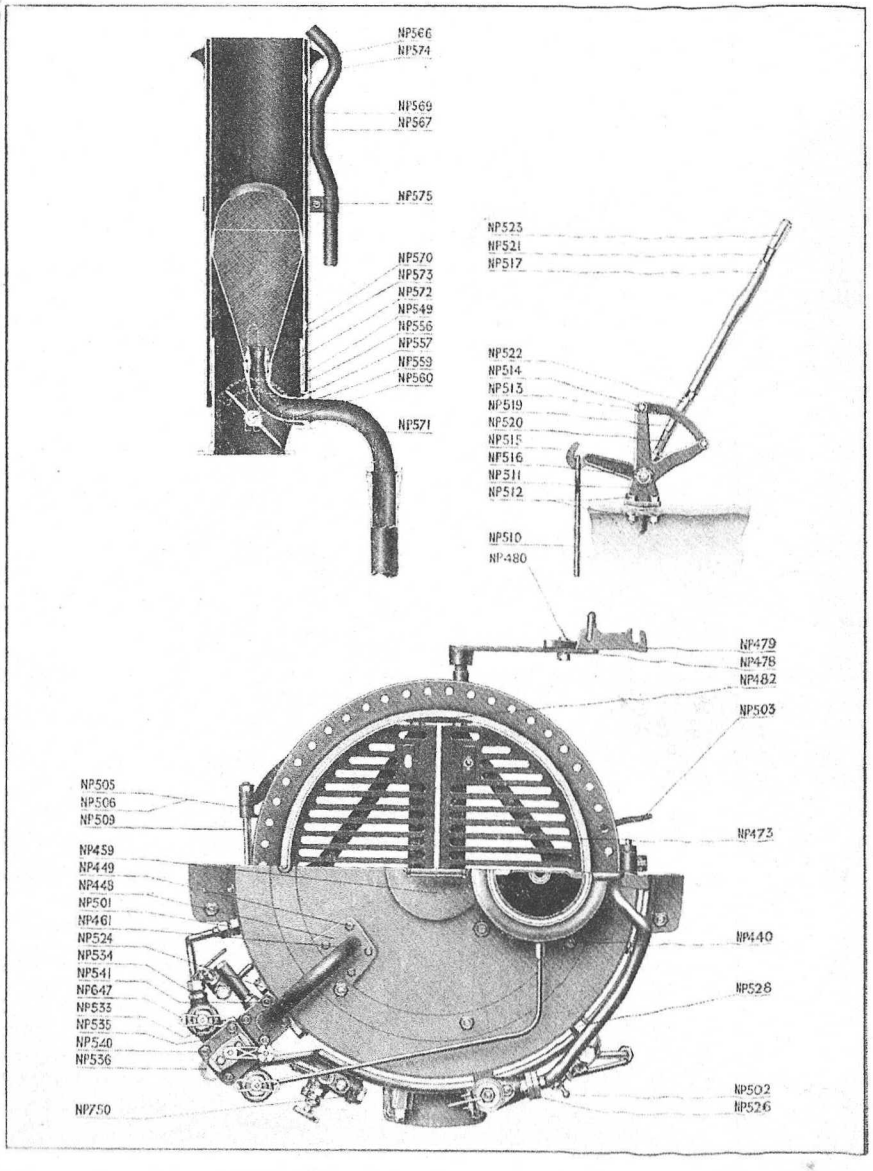

Parts not illustrated are indicated by an Asterisk

Boiler (*concluded*).

List No.	Description.	Price. s.	Price. d.	Code Word.
*N.P.546	¾" Whitworth Plug	—	4	GLOATER
N.P.549	Funnel Base, studded	41	0	GLOGART
N.P.556	Damper Valve	3	0	GLOGICK
N.P.557	Damper Valve Shaft	3	6	GLOGJEB
*N.P.558	Collar for Damper Valve Shaft ..	—	6	GLOGKOP
N.P.559	Quadrant Bracket (Damper Lever)	—	9	GLOGLUD
N.P.560	Lever for Damper Valve	2	3	GLOGLUD
*N.P.564	Plunger for Damper Valve Lever	—	2	GLOGPUN
*N.P.565	Spring for Damper Valve Lever ..	—	1	GLOGQUIT
N.P.566	Funnel Coping	12	6	GLOGPWAM
N.P.567	Funnel Inner Casing	28	6	GLOGSAM
N.P.568	Funnel Outer Casing with Coping ..	40	0	GLOGTON
N.P.570	Funnel Distance Pieces	—	2	GLOGVAT
N.P.571	Blast Pipe Bend	8	0	GLOGWASP
N.P.572	Blast Pipe	6	0	GLOGWULD
N.P.573	Blast Nozzle	1	6	GLOGYAP
N.P.574	Safety Valve Discharge Pipe and Flange	25	6	GLOGYON
N.P.575	Safety Valve Discharge Pipe Band and Clip with Bolt and Nut ..	9	6	GLOGZIG
	For latest style Funnel and combined Blower and Blast Pipe, see pages 88-89.			

Boiler Joints and Packing

List No.	Description.	Price. s.	Price. d.	Code Word.
N.P.576	Boiler Top Joint	9	0	GOLDBALL
N.P.577	Boiler Bottom Joint	9	0	GOLDBASK
N.P.578	Funnel Base Joint	—	8	GOLDBEAT
N.P.579	Blast Pipe Joint—Nozzle to Funnel	—	3	GOLDBERYL
N.P.580	Blast Pipe Joint—Bend to Nozzle	—	3	GOLDBOOK
*N.P.581	Stop Valve Cover Joint	—	3	GOLDBROW
*N.P.582	Superheater Coil Washer	—	2	GOLDDUST
*N.P.583	Release Valve Cover Joint ..	—	3	GOLDEN
*N.P.586	Safety Valve Chest Joint	—	5	GOLDENCOW
*N.P.587	Injector Chest Joint	—	5	GOLDENEYE
*N.P.588	Water Gauge Chest Joints.. ..	—	5	GOLDENMOT
*N.P.589	Feed Check Valve Chest Joint ..	—	4	GOLDENPER
*N.P.590	Superheater Elbow Joint	—	5	GOLDENROD
*N.P.591	Pressure Gauge Cock Joint Washer (Copper) .. .. Per doz.	—	6	GOLDENSEA
*N.P.592	Trunnion Bracket Joint	—	3	GOLDFERN
*N.P.593	Ashpan Hinge Bracket Joint ..	—	3	GOLDFIELD
*N.P.594	Rear Trunnion Bracket Joint ..	—	3	GOLDFILL
*N.P.595	Trunnion Clip Bracket Joint ..	—	3	GOLDFINK
*N.P.596	Handhole Door Joint	1	3	GOLDFISH
*N.P.597	Safety Valve Cover Joint	—	2	GOLDFLOWER
*N.P.598	Special Washer for Boiler Stud Cap Nuts .. .. .. each	—	3	GOLDFOIL

IT IS ESSENTIAL TO STATE WAGGON NUMBER WHEN ORDERING

Parts not illustrated are indicated by an Asterisk

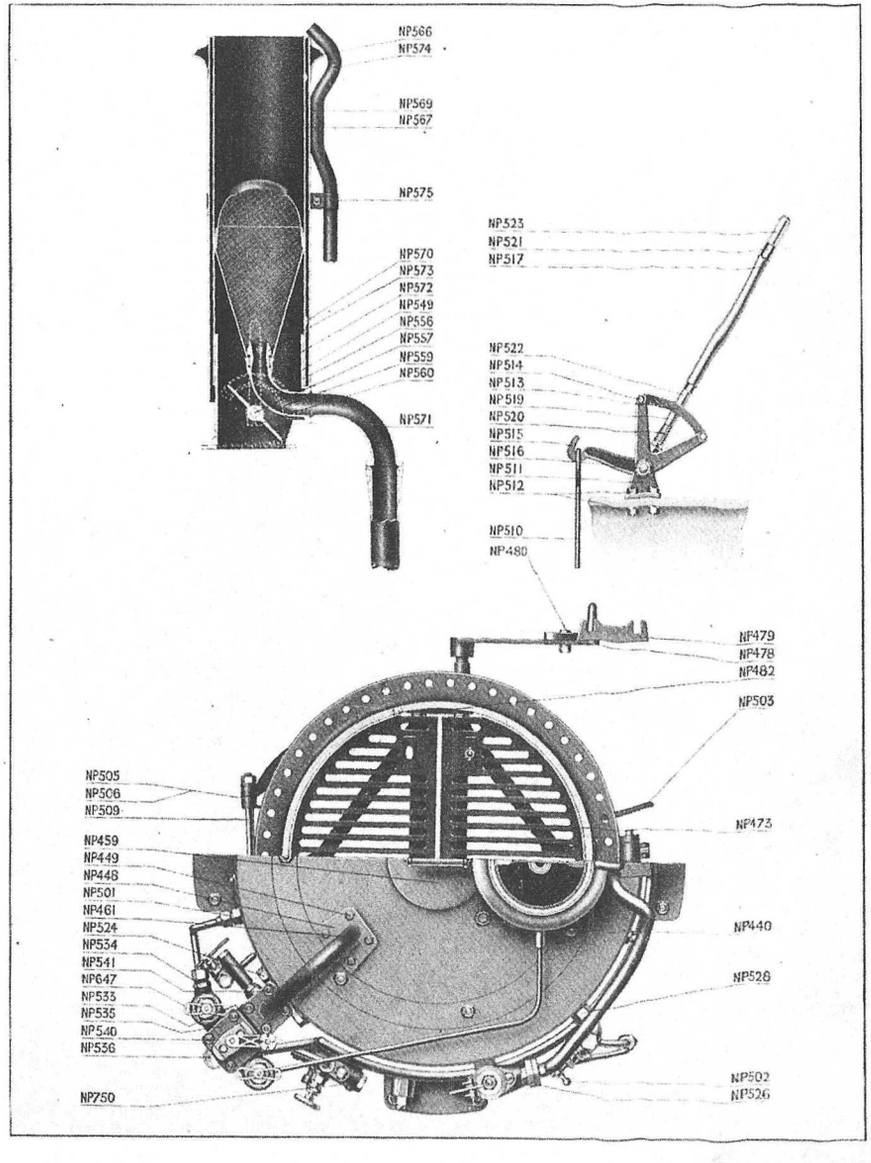

Parts not illustrated are indicated by an Asterisk

Feedwater Heater

List No.	Description.	Price. s.	Price. d.	Code Word.
N.P.600	Feedwater Heater Body, studded ..	35	0	GLOMER
N.P.601	½″ Coupling Nipple for Drain Pipe ..	—	7	GLOMERAT
N.P.602	1″ Coupling Nipple for Release Pipe	1	6	GLOMEROP
N.P.607	Feedheater Cover Bolts, with ⅝″ Special Washer, Cap Nuts and Cap Nut Tops	1	3	GLOOMING
N.P.608	Feedheater Coil with Coil Tube, Coupling Nut and Collars ..	52	6	GLOOMJIG
N.P.609	Feedheater Coil Tube	11	6	GLOPPEN
N.P.610	Feedheater Coil Collars	—	10	GLOPZOT
N.P.611	Feedheater Coil Nipples	7	6	GLORER
N.P.612	1¼″ Coupling Nuts	1	0	GLORIA
*N.P.613	1″ Joint Washer	—	2	GLORIANA
N.P.614	Feedheater Coil Clamp Plate ..	1	3	GLORIAT
N.P.615	Feedheater Coil Dogs	—	6	GLORIETTE
N.P.616	Feedheater Cover with Bosses ..	16	0	GLORIFIC
N.P.619	Exhaust Pipe Bend	6	0	GLORIOSA
N.P.621	Feedheater Body Cleading complete	8	0	GLOSSAM
N.P.624	Snap Head Screws, ¼″×¼″ Per doz.	—	4	GLOSSDEAN
*N.P.625	Cover Joint	1	3	GLOSSENT
*N.P.626	Exhaust Pipe Bend Asbestos Joint	—	2	GLOSSFLY
*N.P.627	Feedheater Coil Comp., with Collars and Coupling Nuts, but without Tube	41	0	GLOSSKIN
N.P.628	Feedheater, fitted up complete (Body lagged and cleaded, Coil, Nipples, Studs, etc.)	140	0	GLOSSPAT

IT IS ESSENTIAL TO STATE WAGGON NUMBER WHEN ORDERING

Parts not illustrated are indicated by an Asterisk

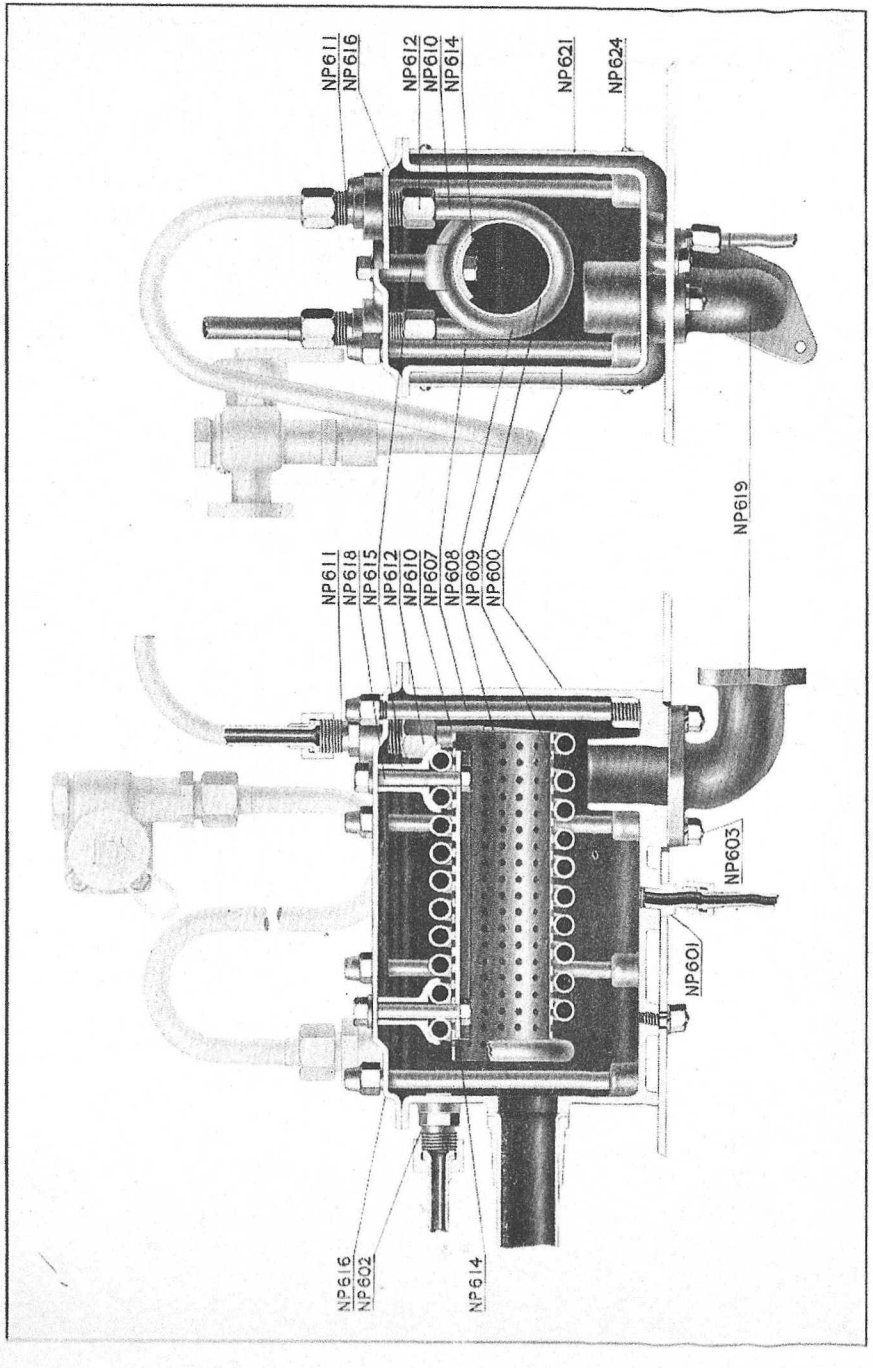

Parts not illustrated are indicated by an Asterisk

Stop, Release, and Auxiliary Valve

List No.	Description.	Price. s.	Price. d.	Code Word.
*N.P.629	Stop Valve Packing.. Per lb.	4	0	GLOTARB
N.P.630	Stop Valve	8	0	GLOTTAL
N.P.631	Stop Valve Spindle	17	6	GLOTTIC
N.P.632	Stop Valve Seat	6	6	GLOTTIDUS
N.P.633	Stop Valve Spindle Gland ..	1	0	GLOTTIST
N.P.634	Stop Valve Gland Set Pin ..	1	0	GLOTTOG
N.P.635	Stop Valve Handle	3	0	GLOTTOGON
N.P.533	Stop Valve Chest	43	6	GLIMMER
N.P.535	Stop Valve Chest Cover	18	9	GLIMPSE
N.P.636	Release Valve	5	6	GLOTTOL
N.P.536	Release Valve Chest, studded ..	14	0	GLIOMATO
N.P.639	Release Valve Spring Washer Per doz.	2	0	GLOUTER
N.P.640	Release Valve Spring	—	9	GLOVACT
N.P.641	Release Valve Push Rod and Pads	1	3	GLOVESPO
N.P.643	Release Valve Foot Lever ..	1	6	GLOWER
N.P.644	Release Valve Foot Lever Bracket	2	0	GLOWFLY
N.P.646	Release Valve Foot Lever Pin, with Split Pins	—	3	GLOWMEB
N.P.647	Auxiliary Valve Handle	2	0	GLOZAN
N.P.648	Auxiliary Valve Spindle	5	6	GLOZENT
N.P.649	Auxiliary Valve Stuffing Box ..	8	6	GLOZIER
N.P.650	Stuffing Box Joint Washer (Copper and Asbestos)	—	1	GLOZOUS
N.P.651	Auxiliary Valve Stuffing Box Washer (Brass)	—	2	GLOZULB
N.P.652	Auxiliary Valve Gland	1	0	GLUCAS
N.P.653	Auxiliary Valve Gland Nut ..	1	9	GLUCIN
N.P.654	Auxiliary Valve	2	0	GLUCINUM
N.P.655	Auxiliary Valve Seat	3	0	GLUCON
N.P.656	½" Coupling Nipple Steam to Blower Pipe	—	7	GLUCORE
*N.P.657	Coupling Nipple, ½" to ¾" Steam to Injector	—	8	GLUCOSAM
N.P.658	Auxiliary Valve Seat Nut	—	9	GLUCOSIC
*N.P.659	Auxiliary Valve Stuffing Box, fitted up complete, with Spindle, Handle, Joint Washer, Stuffing Box Washer, Gland, Gland Nut and Valve	25	0	GLUCOSUMP
N.P.660	Stop, Release and Auxiliary Valve, fitted complete	240	0	GLUCOTAN
*N.P.661	Stop Valve Chest Knee Guard, complete with Stays	6	0	GLUCURON
*N.P.662	Aux. Valve Packing Per lb.	4	3	GLUETOP

IT IS ESSENTIAL TO STATE WAGGON NUMBER WHEN ORDERING

Parts not illustrated are indicated by an Asterisk

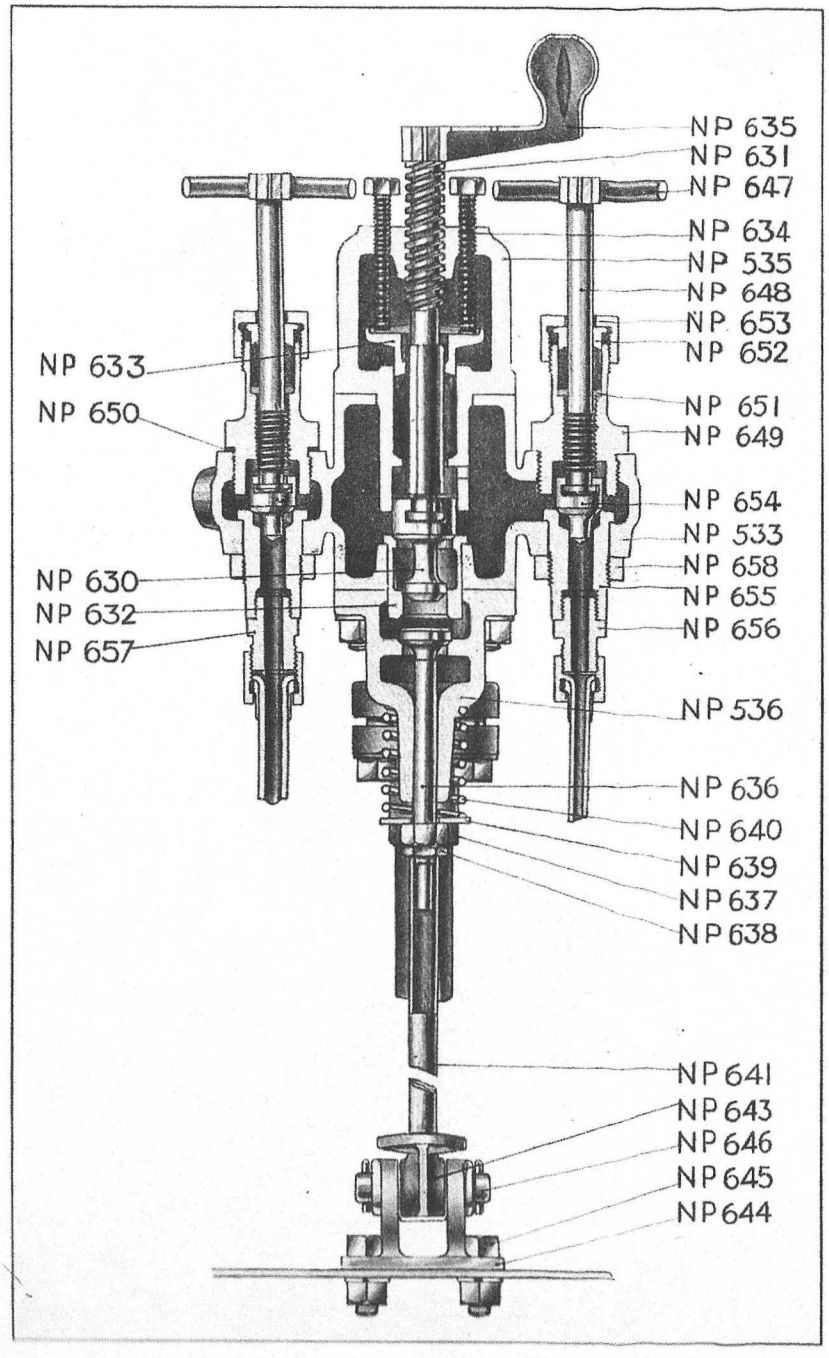

Parts not illustrated are indicated by an Asterisk

Safety Valve

List No.	Description.	Price. s.	Price. d.	Code Word.
N.P.670	Safety Valve Body, studded and seated	28	0	GLUMAC
N.P.673	Safety Valve Cover	9	6	GLUMIF
*N.P.674	Set Pin, $\frac{1}{4}''$ × $\frac{9}{16}''$	—	1	GLUMIFER
N.P.675	Safety Valve Lever	—	9	GLUMPER
N.P.676	Safety Valve Lever Pin, with Split Pins	—	3	GLUMPOP
N.P.677	Safety Valve	3	6	GLUTAC
N.P.678	Safety Valve Seat	7	6	GLUTACON
N.P.679	Safety Valve Spindle and Pin ..	2	0	GLUTAM
N.P.680	Safety Valve Spindle Pin	—	2	GLUTARIC
N.P.681	Safety Valve Spindle Washer ..	—	2	GLUTEAL
N.P.684	Safety Valve Spring	1	0	GLUTINAT
N.P.685	Safety Valve Spring Washer ..	—	6	GLUTINOS
N.P.686	Safety Valve Spring Adj. Nut ..	3	6	GLUTIT
N.P.687	Safety Valve Spring Adj. Washer	—	3	GLUTTON
N.P.688	Safety Valve Body, fitted up comp.	50	0	GLUXINT
*N.P.690	Double Safety Valve Body, studded and seated (as used on Export Boilers)	43	0	GLYBAD
*N.P.691	Safety Valve Cover (Export Boiler)	10	0	GLYBENT
*N.P.692	Safety Valve Lever (,, ,,)	—	9	GLYBIGK
*N.P.693	Safety Valve Spring (,, ,,)	1	9	GLYBOLD
*N.P.694	Safety Valve Spring Washer (,, ,,)	1	3	GLYBUST
*N.P.695	Safety Valve Adjusting Nut (,, ,,)	5	6	GLYCAN
*N.P.696	Safety Valve Adjusting Washer (,, ,,)	—	6	GLYCEPT
*N.P.697	Safety Valve Lock up Cover (,, ,,)	5	0	GLYCIDS
*N.P.698	Safety Valve Lever Pin (,, ,,)	—	4	GLYCOND
*N.P.699	Brass Padlock with Key (,, ,,)	1	9	GLYCURT

IT IS ESSENTIAL TO STATE WAGGON NUMBER WHEN ORDERING

Parts not illustrated are indicated by an Asterisk

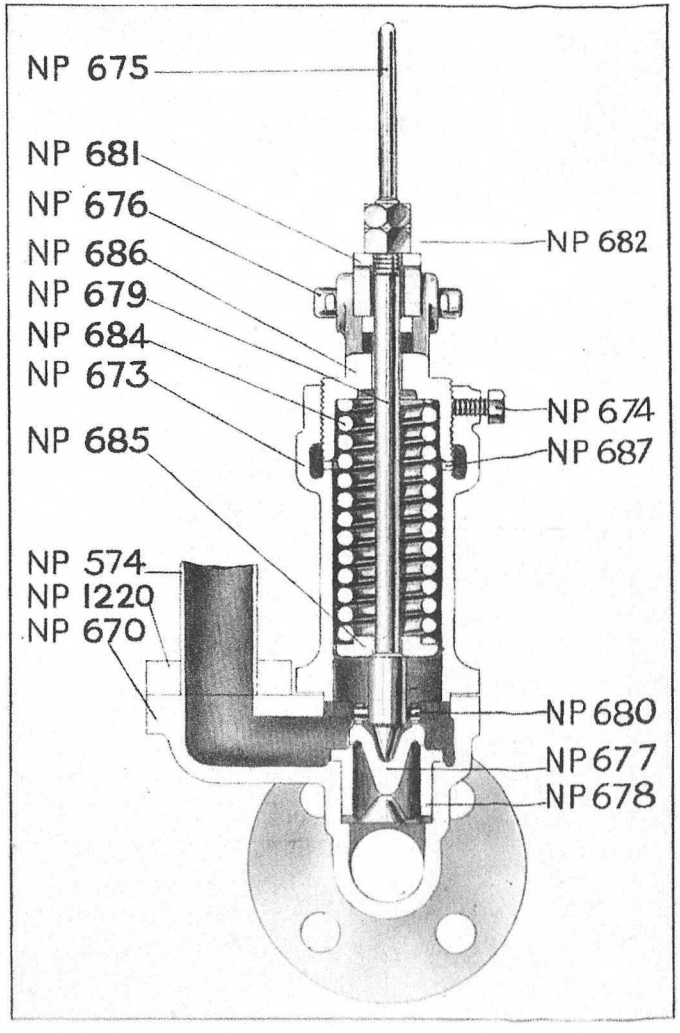

Parts not illustrated are indicated by an Asterisk

Water Gauge Fittings

List No.	Description.	Price. s.	Price. d.	Code Word.
N.P.700	Water Gauge Top Fitting	28	0	GNARLAB
N.P.700A	Top Nut .. E	1	8	GNARLAMB
N.P.701	Water Gauge Bottom Fitting ..	41	0	GNARLEN
N.P.702	Water Gauge Glass, 7¾″ long ..	—	6	GNARLID
N.P.703	Water Gauge Glass Washer ..	—	6	GNARMAT
N.P.704	Water Gauge Glass Protector ..	18	6	GNARMOP
N.P.705	Glands .. B	1	3	GNASHER
N.P.705A	Gland Lifter .. K	—	4	GNASFLY
N.P.706	Gland Nuts .. A	2	0	GNASHING
N.P.707	Ball .. .. J	1	0	GNASHONT
N.P.707A	Ball Nut .. G	1	9	GNASHONZO
N.P.708	Arm Plug .. O	2	6	GNATHIC
N.P.709	Handles .. C	2	6	GNATHION
N.P.710	Drain Cock, complete	10	6	GNATHISM
N.P.711	Clearing Screw R	1	3	GNATHITE
N.P.711A	Cleaning Pin .. D	—	10	GNATHERB
N.P.712	Back Nut .. Q	1	6	GNATHOUS
N.P.713	Front Gland P	1	6	GNATJAM
N.P.714	½″ Coupling Nut	—	3	GNATJIB
N.P.715	½″ Coupling Collar	—	2	GNATKIN
N.P.716	Gauge—Glass Protector, complete ..	18	6	GNATLID

Feed Check Valve

List No.	Description.	Price. s.	Price. d.	Code Word.
N.P.720	Check Valve Chest, with Nipple ..	21	0	GNETAC
N.P.721	⅞″ to 1⅛″ Coupling Nipple ..	4	6	GNETALES
N.P.722	Feed Check Valve	1	6	GNETARP
N.P.723	Feed Check Valve Stopper ..	2	3	GNETAZE
N.P.724	Feed Check Valve Plug	3	6	GNETEND
N.P.725	Feed Shut off Valve	2	0	GNETFAN
N.P.726	Feed Shut off Valve Cap	3	6	GNETFIRS
N.P.727	Feed Shut off Valve Handle ..	1	0	GNETGOL
N.P.728	Feed Check Valve Spring	—	2	GNETHILL
N.P.729	Feed Check Valve Chest, fitted up complete	37	6	GNETJAW

Superheater Elbow and Auxiliary Valve

List No.	Description.	Price. s.	Price. d.	Code Word.
N.P.730	Superheater Elbow, studded ..	17	9	GOADER
N.P.732	Auxiliary Valve Handle	2	0	GOALKEEP
N.P.733	Auxiliary Valve Spindle	5	6	GOALMAN
N.P.734	Auxiliary Valve Stuffing Box ..	8	6	GOALMED
N.P.735	Joint Washer (Copper and Asbestos)	—	1	GOALMITE
N.P.736	Auxiliary Valve Stuffing Box Washer	—	2	GOALMOP
N.P.737	Auxiliary Valve Gland	1	0	GOALMUD
N.P.738	Auxiliary Valve Gland Nut ..	1	9	GOALNAT
N.P.739	Auxiliary Valve	2	0	GOALNEB
N.P.740	Auxiliary Valve Seat	3	0	GOALNICK
N.P.741	Auxiliary Valve Seat Nut	—	9	GOALNORE
N.P.742	Superheater Elbow, fitted up complete	39	0	GOALNUTE

IT IS ESSENTIAL TO STATE WAGGON NUMBER WHEN ORDERING

Parts not illustrated are indicated by an Asterisk

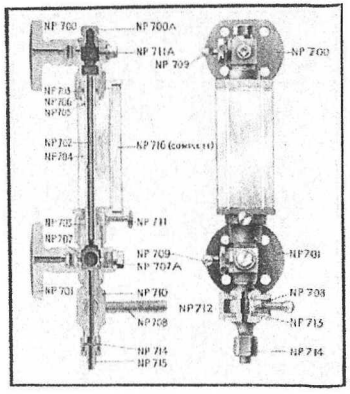

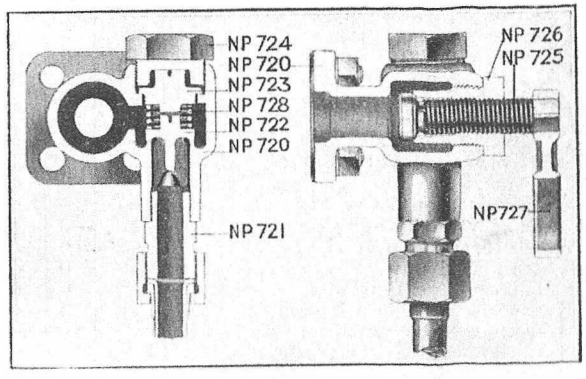

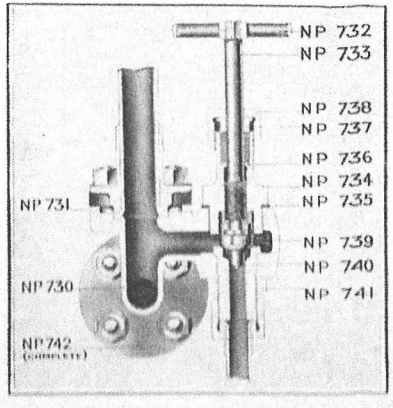

Parts not illustrated are indicated by an Asterisk

Hot Water Injector

List No.	Description.	Price. s.	Price. d.	Code Word.
N.P.750	Hot Water Injector, complete ..	138	0	GOBANG
N.P.751	Steam Nozzle	3	6	GOBARS
N.P.752	Lifting Tube	4	3	GOBBES
N.P.753	Sliding Thimble	1	3	GOBBERSE
N.P.754	Combining Nozzle	3	6	GOBBING
N.P.755	Delivery Nozzle	5	0	GOBBLE
N.P.756	Auxiliary Steam Nozzle	4	6	GOBBOL
N.P.757	Water Cock Handle..	1	6	GOBELIN
N.P.758	Water Cock Plug	5	9	GOBEMOT
N.P.759	Water Cock Stop Washer	—	7	GOBERDE
N.P.760	Water Cock Spring Washer ..	—	4	GOBERNAD
N.P.761	Water Cock Washer	—	4	GOBERTEN
N.P.762	Water Cock Nut	—	4	GOBERTOB
N.P.763	Water Cock Split Pin	—	2	GOBIUS
N.P.764	Water Cock Stop Pin	—	2	GOBLET
N.P.765	Water Cock, complete	10	6	GOBLETED
N.P.766	Delivery Back Pressure Valve ..	1	9	GOBLETFUL
N.P.767	Delivery Back Pressure Valve Seat	2	3	GOBLIN
N.P.768	Delivery Back Pressure Valve Cap	2	3	GOBLINISH
*N.P.769	Delivery Stop Valve Hand Wheels	2	0	GOBLINIZE
*N.P.770	Delivery Stop Valve Taper Pin ..	—	2	GOBLINSH
*N.P.771	Delivery Stop Valve Spindle ..	4	0	GOBLOTAB
*N.P.772	Delivery Stop Valve Spindle Guide	2	9	GOBLOTED
*N.P.773	Delivery Stop Valve Spindle Gland	—	8	GOBLOTISH
*N.P.774	Delivery Stop Valve Spindle Gland Nut	1	3	GOBLOTON
N.P.775	Delivery Stop Valve Packing Ring	—	5	GOBLOTUT
N.P.776	Delivery Stop Valve, complete ..	12	9	GOBSTICK
N.P.777	Injector Body only	66	0	GOBSTUF
N.P.778	Steam End Cap	5	0	GOBSWAN
N.P.778A	Delivery End Cap	2	0	GOBSWAXY
N.P.779	†Overflow Valve Cap (Steam End) ..	1	6	GOBSWET
N.P.780	†Overflow Valve Cap (Delivery End)	2	0	GOBSWIND
N.P.781	†Overflow Valve	1	9	GOBSWOCK
N.P.782	†Overflow Valve Piston	6	0	GOBSWUP
N.P.783	†Lead Moss Packing Per lb.	6	0	GOBTANK
*N.P.785	§Overflow Valve	1	9	GOBTINS
*N.P.786	§Overflow Valve Spindle	6	0	GOBTOSK
*N.P.787	§Overflow Valve Washer, complete	—	4	GOBTURN
*N.P.788	§Overflow Valve Washer Retaining Screw	2	0	GOBVAIN
*N.P.789	§Overflow Valve Cap (Steam end)	1	6	GOBVENT
*N.P.790	§Overflow Valve Cap (Delivery end)	2	0	GOBVINE
*N.P.791	§Overflow Valve Plug	—	2	GOBVOID
*N.P.792	§Overflow Valve Strainer, complete	2	9	GOBVOIDED

§(*These Components suit Injectors numbered up to* 105615).
†(*These Components suit Injectors numbered* 105616 *and up*).

IT IS ESSENTIAL TO STATE WAGGON NUMBER WHEN ORDERING

Parts not illustrated are indicated by an Asterisk

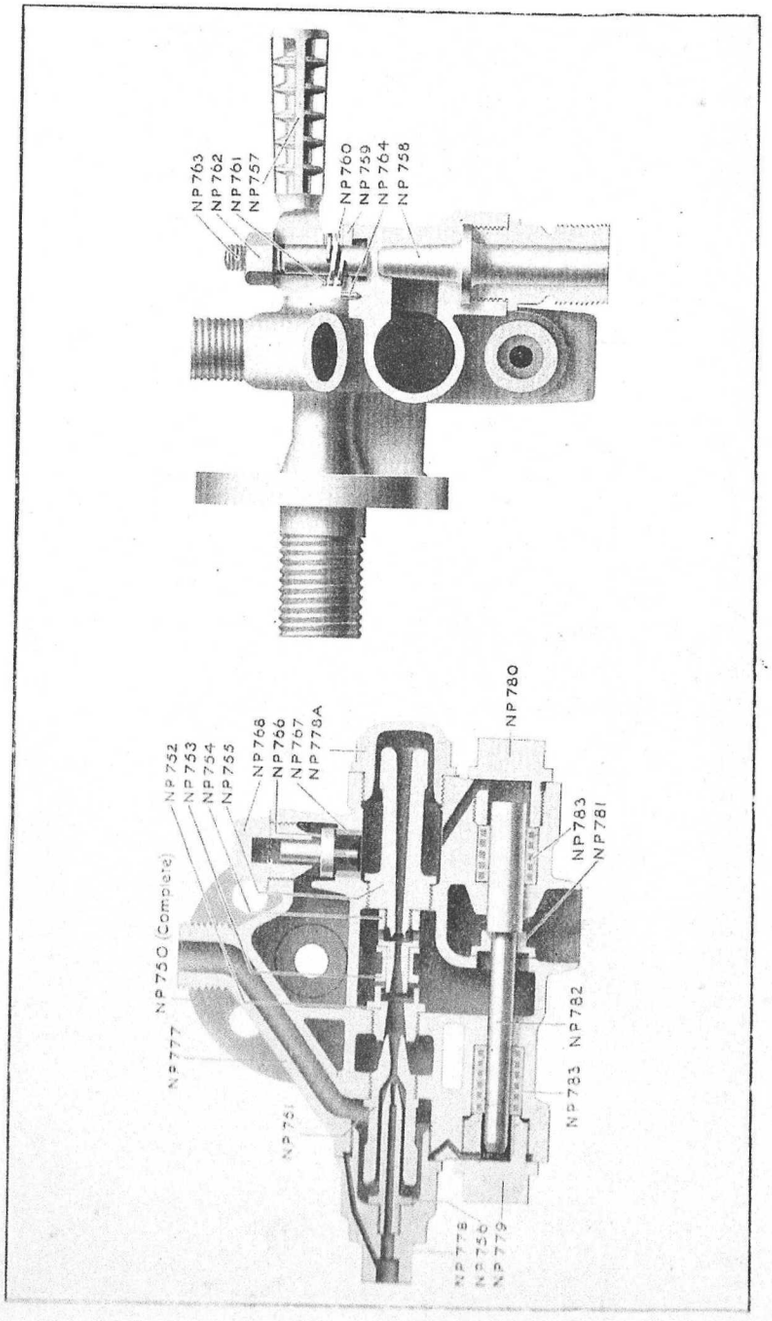

Parts not illustrated are indicated by an Asterisk

Sirius M.B. Injector

List No.	Description.	Price. s.	Price. d.	Code Word.
N.P.800	Injector, complete	90	0	GOGARD
N.P.801	Injector Body	40	0	GOGENT
N.P.802	End Caps	1	9	GOGESK
N.P.803	Steam Cone	3	6	GOGIBAR
N.P.804	Lift Tube	1	9	GOGICOD
N.P.805	Sliding Cone	3	0	GOGIDUN
N.P.806	Delivery Cone	4	0	GOGIERT
N.P.807	Check Valve	1	9	GOGIFAT
N.P.808	Check Valve Cap	2	3	GOGIFUN
N.P.809	Stop Valve Hand Wheel	1	9	GOGIGAG
N.P.810	Stop Valve, complete	13	0	GOGIGUN
*N.P.810A	Stop Valve Spindle only	4	0	GOGIGUST
N.P.811	Stop Valve Stuffing Box	2	9	GOGIHAM
N.P.812	Stop Valve Gland Nut	1	3	GOGIJACK
N.P.813	Stop Valve Gland	—	9	GOGIJUNK
N.P.814	Stop Valve Gland Washer ..	—	6	GOGIKAN
N.P.815	Water Regulator Handle	1	6	GOGIKIL
N.P.816	Water Regulator Plug	5	3	GOGIKUT
N.P.817	Water Regulator Plug Washer ..	—	9	GOGILAMB
N.P.818	Overflow Pipe	2	9	GOGILEFT
N.P.819	½" Copper Washer .. Per doz.	—	6	GOGILIP
N.P.820	¾" Coupling Collar	—	3	GOGIMAR
N.P.821	¾" Coupling Nut	—	6	GOGIMUD
N.P.822	1" Coupling Nut	—	9	GOGINAP
N.P.823	1" Coupling Collar	—	3	GOGINITE

IT IS ESSENTIAL TO STATE WAGGON NUMBER WHEN ORDERING

Parts not illustrated are indicated by an Asterisk

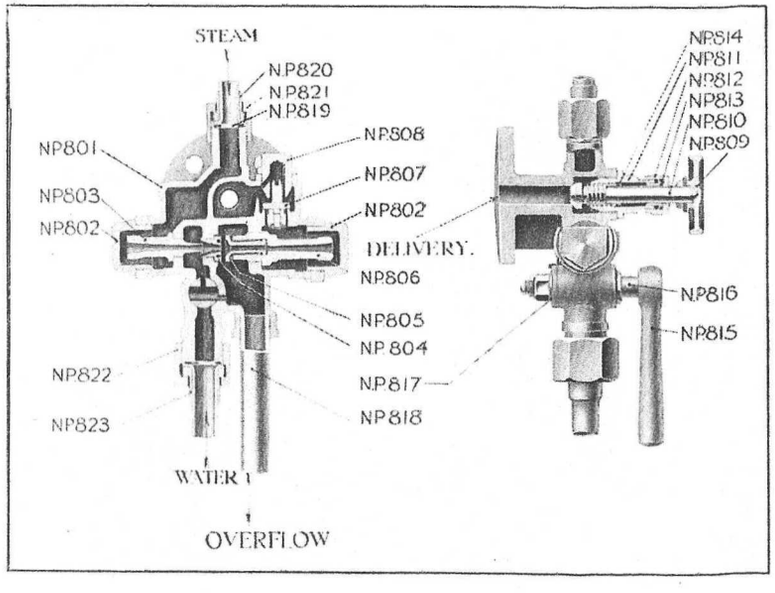

Parts not illustrated are indicated by an Asterisk

Cylinder and Chain Lubricators

Cylinder Lubricator

List No.	Description.	Price. s.	Price. d.	Code Word.
N.P.850	Lubricator Body—studded ..	25	0	GRANDAP
N.P.850A	Lubricator Body Bush	—	9	GRANDBIN
N.P.851	Stud, $\frac{5}{16}'' \times 1\frac{3}{16}''$, with Spring Washer and Nut—fixing Check Valve Chest	—	2	GRANDCAN
N.P.852	Plug, $\frac{1}{4}''$ Gas	—	2	GRANDEP
N.P.853	Lubricator Heating Pipe	1	3	GRANDFIG
N.P.854	Lubricator Heating Pipe Nipple ..	3	3	GRANDGIB
N.P.855	Lubricator Body Cover	2	6	GRANDHOP
N.P.856	Set Pin, $\frac{5}{16}'' \times \frac{9}{16}''$, with Spring Washer	—	2	GRANDHICK
N.P.857	Lubricator Shaft Retarding Spring	—	3	GRANDKIP
N.P.858	Lubricator Shaft Retarding Spring Pin with Spring Washers and Faced Nut	—	3	GRANDLAPE
N.P.859	Lubricator Cover Lid	1	3	GRANDMAR
N.P.860	Lubricator Cover Lid Bolt ..	1	0	GRANDNACK
N.P.861	Lubricator Lid Knob	—	6	GRANDO
N.P.862	Lubricator Lid Spring	—	2	GRANDPIP
N.P.863	Lubricator Cylinder	2	6	GRANDRAG
N.P.864	Lubricator Plunger	2	0	GRANDSAP
N.P.865	Lubricator Plunger Wrist Pin with Split Pins	—	5	GRANDTUB
N.P.866	Lubricator Eccentric Strap ..	1	9	GRANDVUE
N.P.867	Lubricator Eccentric	1	0	GRANDWIG
N.P.868	Lubricator Shaft	2	0	GRANDWYE
N.P.869	Lubricator Shaft Bush	—	6	GRANDZAD
N.P.870	Lubricator Shaft Retaining Washer	—	2	GRANDZUST
N.P.871	Lubricator Ratchet Wheel ..	3	6	GRASSAM
N.P.872	Lubricator Pawl	—	4	GRASSBAN
N.P.873	Lubricator Pawl Spring	—	2	GRASSBEG
N.P.874	Lubricator Pawl Pin with Split Pin	—	6	GRASSBIER
N.P.875	Lubricator Pawl Carrier	3	6	GRASSBOB
N.P.876	Lubricator Pawl Carrier Set Pin and Nut	—	2	GRASSCANE
N.P.877	Lubricator Pawl Carrier Washer ..	—	1	GRASSDET
N.P.878	Lubricator Driving Rod	—	4	GRASSDEAR
N.P.879	Lubricator Driving Rod Crank Pin	—	9	GRASSDINT
N.P.880	Lubricator Shaft Distance Piece ..	—	4	GRASSDOVE
N.P.881	Lubricator Shaft Washer	—	2	GRASSDUCT
N.P.882	Lubricator Shaft Spring	—	2	GRASSFAT
N.P.883	Lubricator Handle	1	6	GRASSFECK
N.P.884	Lubricator Handle Lock Nut, $\frac{1}{2}''$	—	2	GRASSFIND
N.P.885	Lubricator Oil Filter	3	0	GRASSFORD
N.P.886	Lubricator Supporting Bracket ..	14	0	GRASSFUD
N.P.887	Lubricator Connecting Rod ..	—	10	GRASSGANG
N.P.888	Lubricator Connecting Rod End (Gun Metal)	2	3	GRASSGEST
N.P.889	Lubricator Connecting Rod End (Steel, Bushed)	2	6	GRASSGONK
N.P.889A	Lubricator Connecting Rod End Bush	—	3	GRASSGRAS
N.P.890	Lubricator Connecting Rod End Grease Cup	—	6	GRASSGUG
N.P.891	Lubricator Driving Rod Crank ..	1	9	GRASSHAM
N.P.892	Lubricator Driving Rod Crank Washer	—	2	GRASSHECK

IT IS ESSENTIAL TO STATE WAGGON NUMBER WHEN ORDERING

Parts not illustrated are indicated by an Asterisk

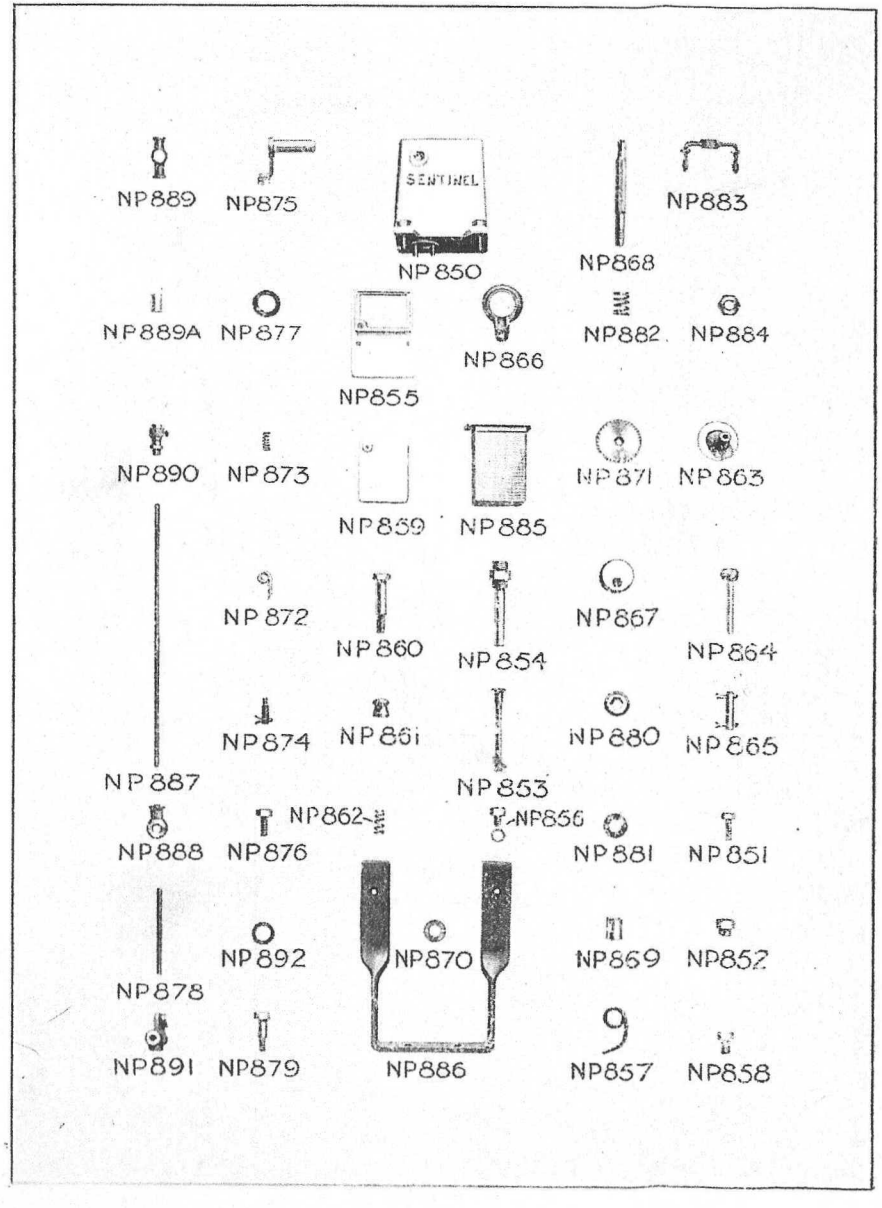

Parts not illustrated are indicated by an Asterisk

Cylinder Lubricator (*continued*).

List No.	Description.	Price. s.	Price. d.	Code Word.
N.P.893	Lubricator Valve Chest	7	6	GRASSHIP
N.P.894	Coupling Nipple, ½" Special ..	—	6	GRASSHOPE
N.P.895	Lubricator Check Valve		6	GRASSHUB
N.P.896	Lubricator Check Valve Spring ..	—	2	GRASSJACK
N.P.897	Lubricator Check Valve Cap ..	—	6	GRASSJED
N.P.898	Lubricator Test Valve Body ..	9	0	GRASSJOP
N.P.899	Coupling Nipple, ½"	—	7	GRASSKAN
N.P.900	Lock Nut, ½" Gas	—	6	GRASSHERD
N.P.904	Lubricator Test Valve Seat ..	2	0	GRASSLAMP
N.P.905	Lubricator Test Valve Spring ..	—	2	GRASSLEAD
N.P.906	Lubricator Test Valve Spindle ..	1	0	GRASSLOAK
N.P.907	Lubricator Test Valve Handle ..	—	6	GRASSLUST
N.P.908	Lubricator Shut off Valve ..	1	3	GRASSMAZ
N.P.909	Lubricator Shut off Valve Handle	—	6	GRASSMET
N.P.910	Lubricator Shut off Valve Cap ..	1	6	GRASSMIDE
N.P.911	Lubricator Cylinder Joint		1	GRASSMORT
N.P.912	Lubricator Connecting Rod with Ends and Grease Cup	7	6	GRASSMUIR
N.P.913	Lubricator Driving Gear, complete	9	0	GRASSNAPE
N.P.914	Lubricator Valve Chest, fitted complete	11	6	GRASSNEAT
N.P.915	Lubricator Connecting Rod End and Grease Cup	3	3	GRASSNINE
N.P.916	Lubricator, fitted complete with Valve Chest	100	0	GRASSNOTE
N.P.917	Lubricator, fitted complete with Valve Chest, Driving Gear and Bracket	120	0	GRASSNUDE
N.P.918	Lubricater Test Valve, fitted comp.	22	6	GRASSPAST

Chain Lubricator

List No.	Description.	Price. s.	Price. d.	Code Word.
N.P.919	Chain Lubricator Box and Bracket	11	6	GRATARK
*N.P.920	Chain Lubricator Box and Bracket R. H. for 10′ 9½" wheel base ..	11	6	GRATERN
*N.P.921	Chain Lubricator Box and Bracket L.H 3 Way Tip only	11	6	GRATIPP
N.P.923	Chain Lubricator Cover	2	0	GRATUNE
N.P.924	Chain Lubricator Side Rod ..	—	8	GRAVACT
N.P.925	Chain Lubricator Side Rod Spring	—	2	GRAVEIL
N.P.926	Chain Lubricator Hinge Rod ..	—	5	GRAVIEN
N.P.927	Chain Lubricator Pipe and Tee Piece	1	6	GRAVODE
N.P.928	Chain Lubricator Stop Valve Body	2	0	GRAVUX
N.P.929	Chain Lubricator Stop Valve Spindle	—	9	GRAWAG
N.P.930	Chain Lubricator Stop Valve Spring	—	2	GRAWENT
N.P.931	Chain Lubricator Packing Retaining Washer	—	1	GRAWING
N.P.932	Chain Lubricator Stop Valve Spindle Chain	—	1	GRAWOLD
N.P.933	Chain Lubricator, fitted complete	22	0	GRAWOST
N.P.934	Chain Lubricator Stop Valve Body, fitted complete	3	0	GRAXBAIT
*N.P.935	Chain Lubricator Distance Piece ..	—	2	GRAXBET
*N.P.936	Chain Lubricator Pipe (For 11, 13 and 15 Tooth Pinions)	1	0	GRAXBIER
*N.P.937	Chain Lubricator Pipe (For 17 and 19 Tooth Pinions)	1	0	GRAXBOY
*N.P.938	Chain Lubricator Tee Piece ..	—	9	GRAXBUMP

IT IS ESSENTIAL TO STATE WAGGON NUMBER WHEN ORDERING

Parts not illustrated are indicated by an Asterisk

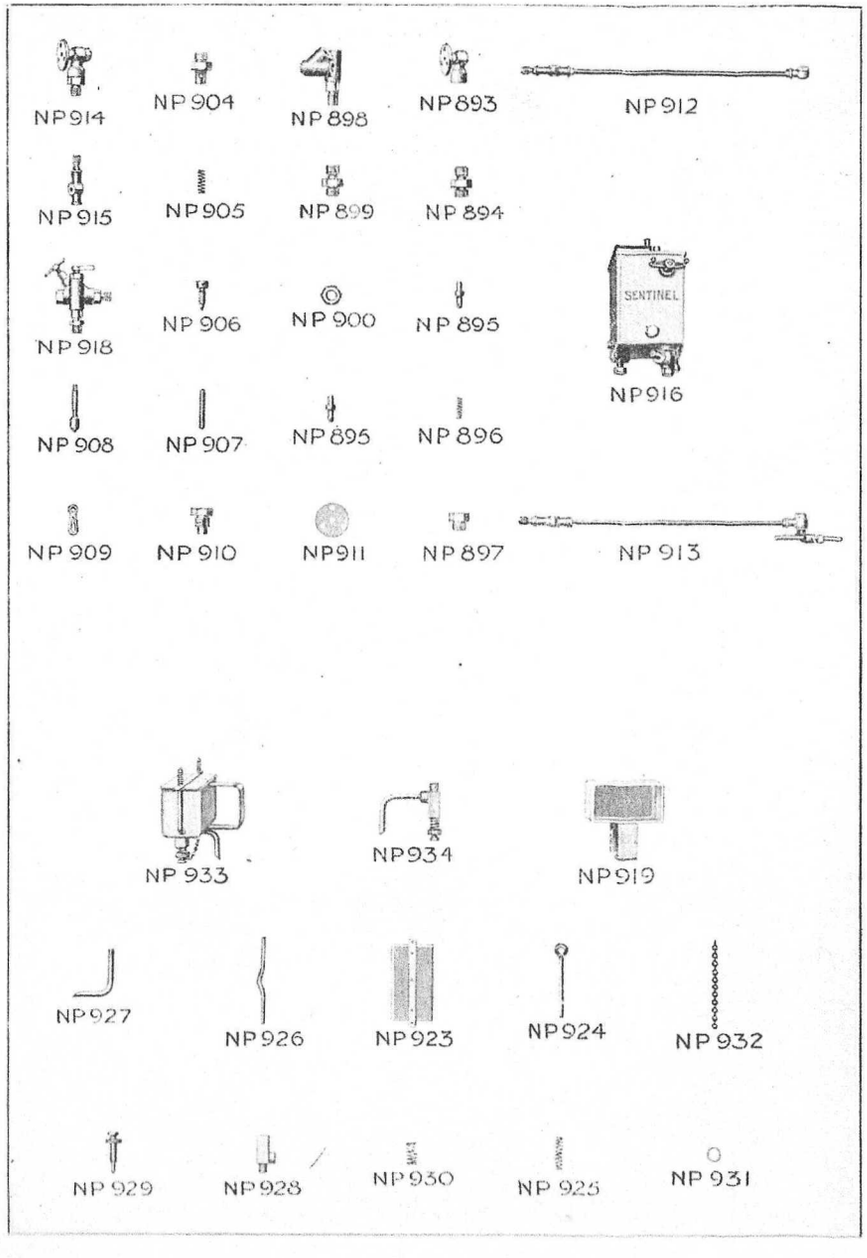

Parts not illustrated are indicated by an Asterisk

Water Tank, Water Lifter and Fittings

List No.	Description.	Price. s.	Price. d.	Code Word.
N.P.940	Water Tank with Manhole Door and Filling Cover, studded	300	0	GUARDANT
N.P.941	Plug, ¾″ Gas	—	4	GUARDBOAT
N.P.942	Coupling Nipple, 1″ for Pump Return Pipe	1	6	GUARDBRUSH
N.P.943	Manhole Door	14	0	GUARDCELL
N.P.944	Water Level Gauge Body	1	3	GUARDESK
N.P.945	Water Level Gauge Valve	—	3	GUARDFONT
N.P.946	Water Level Gauge Spring ..	—	2	GUARDGANT
N.P.947	Water Level Gauge, fitted complete	1	9	GUARDING
N.P.948	Tank Internal Suction Pipe (Pump) and Socket..	13	6	GUARDLEAF
N.P.949	Tank Internal Suction Pipe (Injector) and Socket	13	9	GUARDLESS
N.P.950	Coupling Nipple, 1¼″ for Pump Suction Pipe	5	9	GUARDLOCK
N.P.951	Coupling Nipple, 1″ to 1″ for Injector Suction Pipe	3	0	GUARDMAN
N.P.952	Tank Strap with Ends, Collars, Faced Nuts and Jam Nuts and Lining	20	0	GUARDMOUNT
*N.P.953	Tank Strap Collar	—	8	GUARDO
N.P.954	Tank Strap Rubber Lining ..	5	3	GUARDRAIL
N.P.956	Water Lifter Body	5	0	GUARDROOM
N.P.958	Water Lifter Nozzle	3	6	GUARDSTONE
N.P.959	Water Lifter complete with Nozzle	9	0	GUARDWIRE
N.P.960	Tank Filling Hole Cover, complete with Chain and Bar	2	8	GUAREA
N.P.961	Tank Filling Hole Cover Chain and Bar	—	6	GUBBINGS
*N.P.962	Water Lifter Filling Hole Cover ..	—	7	GUBER

IT IS ESSENTIAL TO STATE WAGGON NUMBER WHEN ORDERING

Parts not illustrated are indicated by an Asterisk

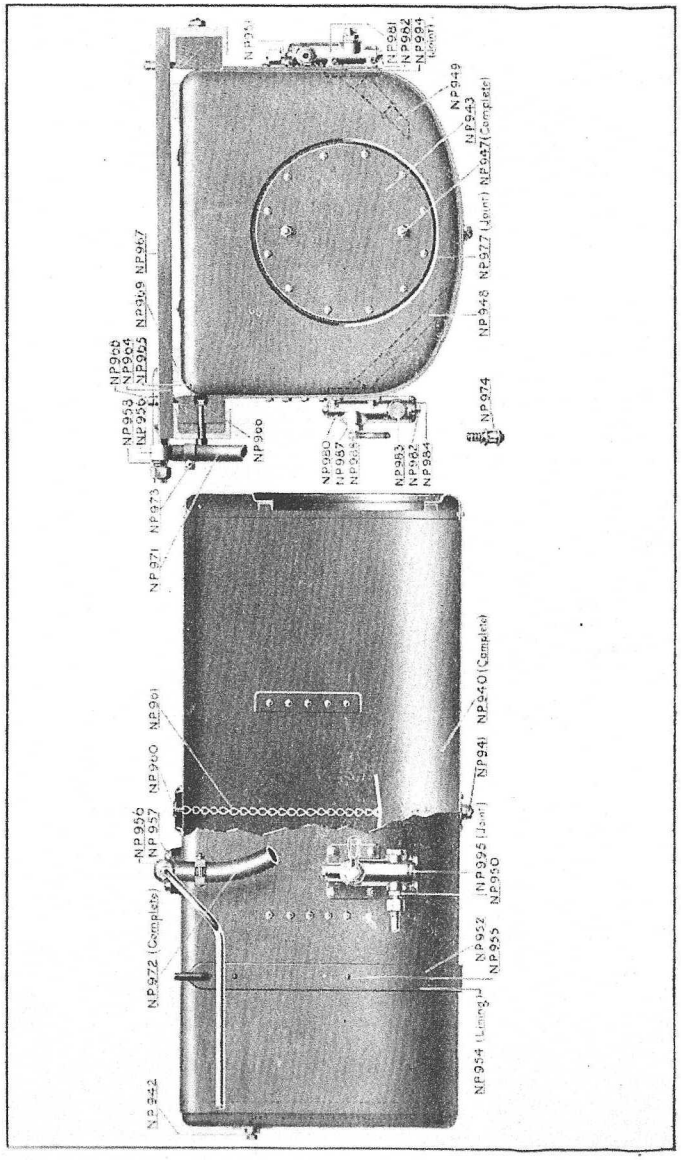

Parts not illustrated are indicated by an Asterisk

Water Tank, Water Lifter and Fittings (*continued*).

List No.	Description.	Price. s.	Price. d.	Code Word.
*N.P.963	Water Lifter Filling Hole Cover Spring	—	2	GUBERNAC
N.P.964	Tank Adjusting Block	1	0	GUBERNIT
N.P.965	Tank Adjusting Block Wedge ..	—	6	GUDERMAN
N.P.967	Tank Front Steady Channel ..	10	0	GUDREP
*N.P.969	Tank Buffer	1	3	GUDRUCK
*N.P.970	Tank Buffer Pin with Spring Washer and Faced Nut	—	4	GUDSACK
N.P.971	Rubber Suction Hose Pipe, 30 ft. ..	94	0	GUDSEPT
N.P.972	Rubber Suction Hose Pipe with Strainer	98	0	GUDSUT
N.P.973	Rubber Suction Hose Pipe Clip ..	1	0	GUDSOAP
N.P.974	Hose Pipe Strainer with Gauze ..	3	9	GUDSUMP
*N.P.975	Hose Pipe Strap	2	6	GUDTATE
*N.P.976	Internal Suction Pipe Joint ..	1	0	GUDTEAM
N.P.977	Manhole Door Joint	3	0	GUDTIMID
N.P.980	Water Filter Body, studded (Pump)	13	6	GUGAMP
N.P.981	Water Filter Body, studded (Injector)	13	6	GUGEKE
N.P.983	Plug, 1″ Gas	2	0	GUGOUS
N.P.984	Water Filter Cover	—	9	GUIANA
*N.P.985	Water Filter Mantle and Ends ..	4	0	GUIBBER
*N.P.986	Shut off Valve	2	0	GUIDANCE
N.P.987	Shut off Valve Cap	3	6	GUIDER
N.P.988	Shut off Valve Handle	—	7	GUIDONIAN
N.P.989	Shut off Valve with Handle and Cap	6	3	GUIDNET
N.P.990	Water Filter Body, fitted complete and with Nipples (Pump) ..	29	0	GUIDLAN
N.P.991	Water Filter Body, fitted complete and with Nipples (Injector) ..	29	0	GUILDGIL
N.P.994	Water Filter Body Joint	1	0	GUILEMOT
N.P.995	Water Filter Cover Joint	—	6	GUILLOCHE

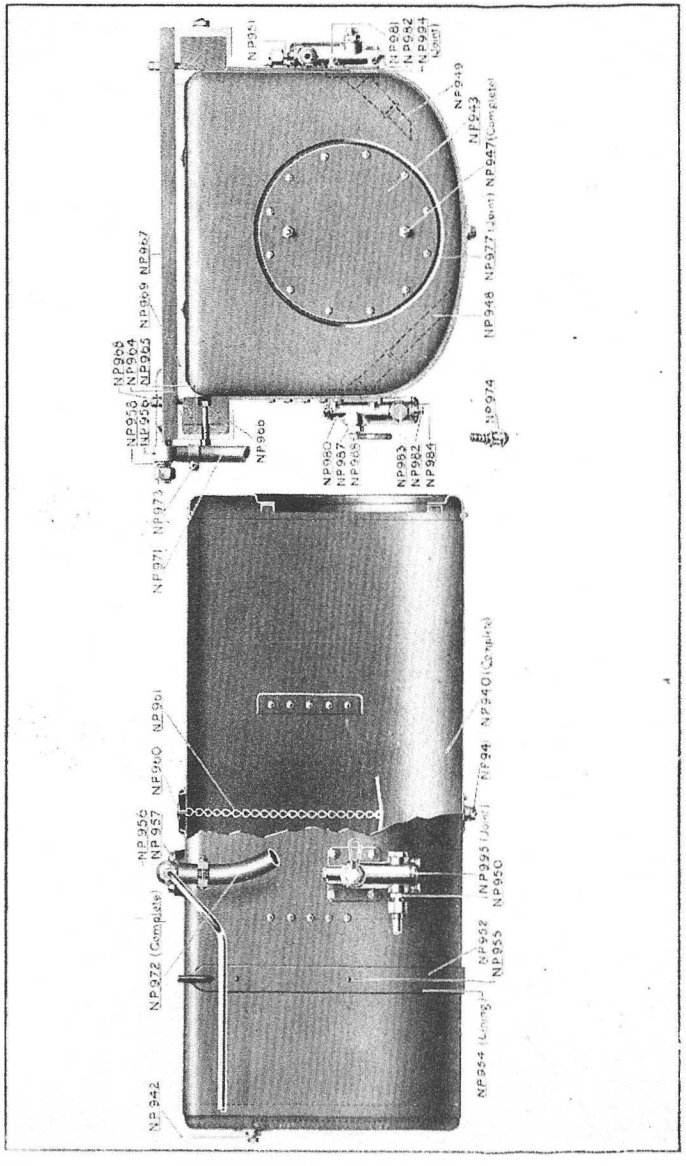

Front Axle and Steering Gear

List No.	Description.	Price. s.	Price. d.	Code Word.
N.P.1000	Front Axle, fitted with Spring Seats, Plates, Top Bushes, Dust Shields and Felt Washers	210	0	HABAK
N.P.1002	Front Axle Bracket Bolt with Castle Nut and Split Pin	3	6	HABEAS
N.P.1003	Front Axle Bracket with Pivot Bottom Bush and Grease Nipple	38	6	HABEASCOR
N.P.1004	Front Spring Seat with Rivet ..	7	0	HABENAR
N.P.1005	Front Spring Seat Plate with two Rivets	2	9	HABERDASH
N.P.1006	Grease Cup Base	5	0	HABERGEON
*N.P.1007	Stud—$\frac{1}{2}''\times1\frac{1}{2}''$ with Spring Washer and Faced Nut for fixing base to axle	—	3	HABILE
N.P.1008	Grease Cup	1	6	HABILIMENT
N.P.1009	Grease Cup Spring	—	3	HABILITATE
N.P.1010	Grease Cup Top Washer	—	2	HABITALE
N.P.1011	Grease Cup Leather Washer ..	—	4	HABITANCY
N.P.1012	Grease Cup Bottom Washer ..	—	1	HABITANT
N.P.1013	Grease Cup Screw	—	5	HABITION
N.P.1014	Grease Cup Screw Nut	—	4	HABITCLOTH
N.P.1015	Grease Cup Screw Collar	—	1	HABITEDE
N.P.1016	Grease Cup complete including base	9	0	HABITSHIRT
N.P.1016A	Grease Cup complete, without base	4	0	
N.P.1017	Front Axle Pivot with two Bushes	95	0	HABITSPASM
N.P.1018	Front Axle Pivot Top Bush ..	12	0	HABITUAL
N.P.1019	Front Axle Pivot Top Bush Felt Washer	—	6	HABITUATE
N.P.1020	Front Axle Pivot Top Bush Dust Shield	—	5	HABITUDE
N.P.1021	Front Axle Pivot Bottom Bush ..	12	0	HABITUE
N.P.1022	Front Axle Journal Bush	16	0	HALSHAW
N.P.1023	Front Axle Journal	72	0	HACIENDA
N.P.1024	Front Axle Journal Plate	7	6	HACKAM
N.P.1025	Front Axle Journal Nut	6	0	HACKAMOR
N.P.1026	Split Pin, $\frac{3}{8}''\times4\frac{1}{2}''$ .. (per doz.)	2	0	HACKBER
*N.P.1027	Front Axle Journal with two Nuts and Split Pins	85	6	HACKBERRY
N.P.1028	Front Axle Journal Thrust Washer, $\frac{1}{16}''$	1	6	HACKHOOK
N.P.1029	Front Axle Journal Thrust Washer, $\frac{3}{32}''$	2	0	HACKING
N.P.1030	Front Axle Journal Thurst Washer, $\frac{1}{8}''$	2	6	HACKIRON
N.P.1031	Front Axle Journal Thrust Washer, $\frac{5}{32}''$	2	9	HACKJOCK
N.P.1032	Front Axle Journal Thrust Washer, $\frac{3}{16}''$	3	0	HACKMAN
N.P.1033	Front Wheel	202	6	HACKMATAK
N.P.1034	Front Wheel Cap	1	10	HACKNEYED
N.P.1035	Front Wheel Cap Set Screw ..	—	2	HACKTHORN
N.P.1036	Front Wheel Cap Rubber Band ..	4	6	HADDOCK
N.P.1037	Front Wheel Cap Disc	—	5	HADITH
*N.P.1038	Front Wheel Cap, fitted complete	7	6	HADROCEN
N.P.1039	Solid Rubber Tyres, 180 m.m. Section × 720 m.m. fitting (Maker's Selling	Price)		HADROSAUT
N.P.1040	Front Spring	54	6	HADSHAD

IT IS ESSENTIAL TO STATE WAGGON NUMBER WHEN ORDERING

Parts not illustrated are indicated by an Asterisk

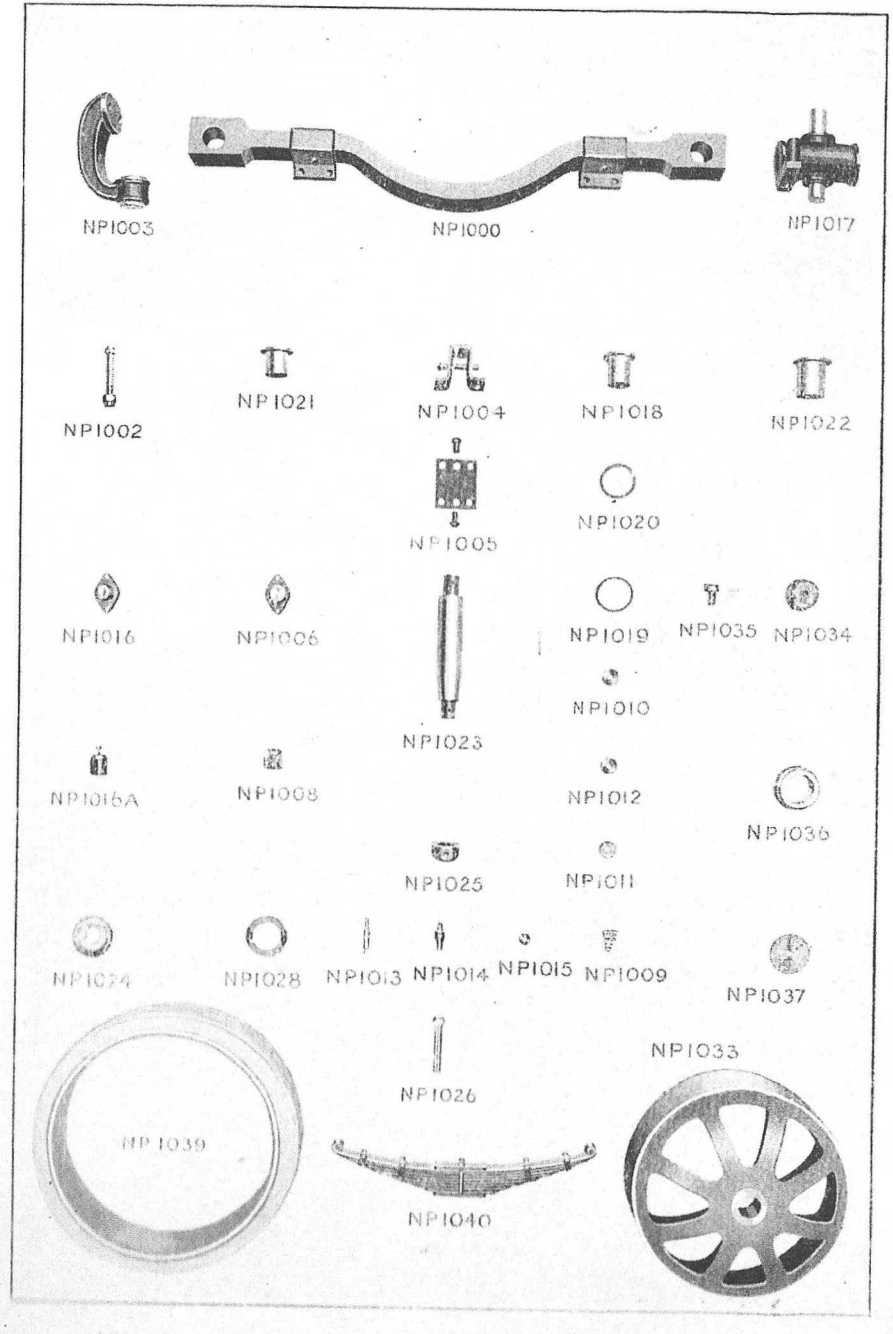

Parts not illustrated are indicated by an Asterisk

Front Axle and Steering Gear (*continued*).

List No.	Description.	Price. s.	Price. d.	Code Word.
N.P.1041	Front Spring Buckle Bolt with Nuts, Spring Washer and Split Pins ..	—	10	HADSHEK
N.P.1042	Front Spring Slipper	11	6	HADSHOUR
N.P.1043	Grease Nipple	—	6	HAGABAG
N.P.1044	Spring Pin	1	0	HAGABICK
*N.P.1045	Spring Slipper, fitted with Pin, Grease Nipple and Locking Bolt	13	6	HAGABONE
N.P.1046	Steering Gear Casing—Studded ..	66	6	HAGABUST
*N.P.1047	Stud, $\frac{1}{2}'' \times 1\frac{1}{2}''$ with Spring Washer and Faced Nut Fixing Cover to Casing	—	3	HAGACAP
N.P.1048	Bolt, $\frac{13}{16}'' \times 2\frac{1}{4}''$, fitted Hex with Spring Washer, Castle Nut and Split Pin for fixing Casing to frame	1	0	HAGACEPT
*N.P.1049	Stud, $\frac{5}{8}'' \times 2\frac{1}{4}''$ with Spring Washer, Castle Nut and Split Pin for fixing Casing to frame	—	7	HAGACIDE
N.P.1050	Bolt, $\frac{11}{16}'' \times 2''$ fitted Hex with Spring Washer and Faced Nut, fixing Casing to frame	—	7	HAGACOPS
N.P.1051	Plug, $\frac{1}{2}''$ Gas (in frame) for Oil Filling Hole	—	3	HAGACULT
N.P.1052	Steering Gear Casing Cover ..	10	6	HAGADART
N.P.1053	Steering Column	21	0	HAGADESK
N.P.1054	Steering Spindle Seat	3	9	HAGADIMP
N.P.1055	Steering Spindle and Feather ..	40	0	HAGADOST
*N.P.1056	Steering Spindle Feather	—	3	HAGADUCK
N.P.1057	Steering Column Top	13	0	HAGAFAT
N.P.1059	Steering Wheel	25	0	HAGAFINK
N.P.1060	Steering Wheel Pin, complete ..	1	9	HAGAFORE
N.P.1063	Steering Weighshaft with Stud, Castle Nut and Split Pin ..	38	6	HAGAEST
N.P.1064	Stud, $\frac{7}{8}'' \times 3\frac{3}{4}''$ with Castle Nut and Split Pin	1	0	HAGAGHBE
N.P.1065	Steering Weighshaft Spring ..	—	10	HAGAGOOD
N.P.1066	Steering Spindle Nut	15	0	HAGAGUNS
N.P.1067	Steering Drop Lever	12	6	HAGAHAND
N.P.1068	Steering Gear Ball with Castle Nut and Split Pin	8	8	HAGAHELD
N.P.1069	Steering Lever, R.H.	28	6	HAGAHICK
N.P.1070	Steering Lever, L.H.	12	6	HAGAHOAX
N.P.1071	Steering Lever Bolt with Spring Washer and Faced Nut	3	0	HAGAHULL
N.P.1072	Steering Coupling Rod	11	6	HAGAJAPE
N.P.1073	Steering Drag Link	7	3	HAGAJEM
N.P.1074	Steering Drag Link and Coupling Rod End, R.H.	21	0	HAGAJILT
N.P.1075	Steering Drag Link and Coupling Rod End, L.H.	21	0	HAGAJOLS
N.P.1076	Steering Drag Link and Coupling Rod End Bolt with Castle Nut and Split Pin	—	10	HAGAJUMP
N.P.1077	Steering Drag Link and Coupling Rod Spring	—	8	HAGAKAIL

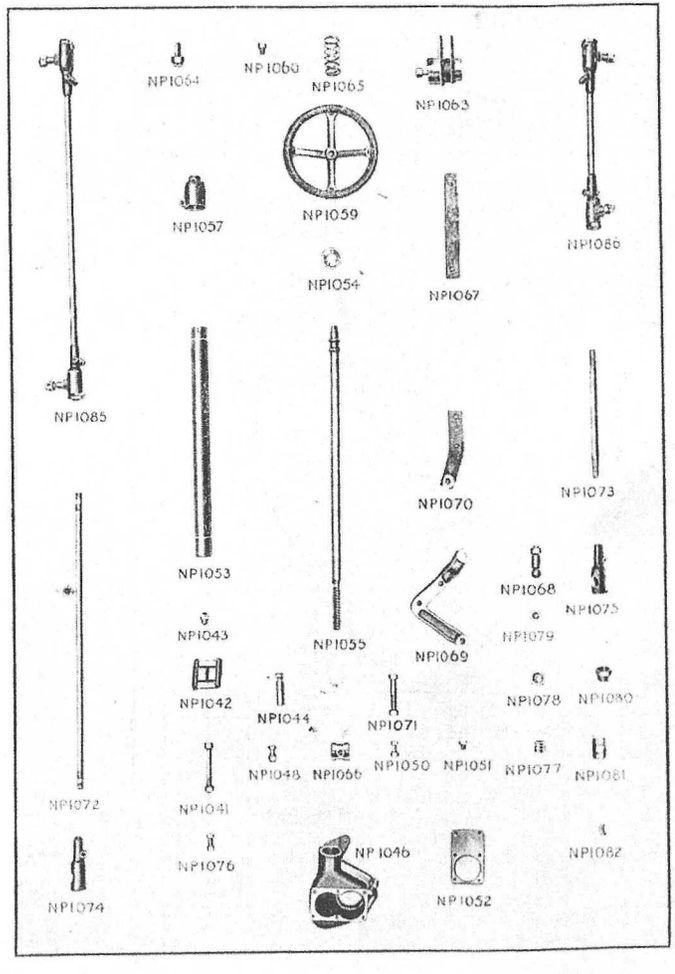

Front Axle and Steering Gear (*continued*).

List No.	Description.	Price. s.	Price. d.	Code Word.
N.P.1078	Steering Drag Link and Coupling Rod Spring Ball Socket ..	2	6	HAGAKELT
N.P.1079	Steering Drag Link and Coupling Rod Ball Socket	1	9	HAGAKISK
N.P.1080	Steering Drag Link and Coupling Rod End Cap with Grease Nipple	7	6	HAGAKOLA
N.P.1081	Steering Drag Link and Coupling Rod Dust Cover	1	0	HAGAKUDO
*N.P.1082	Steering Drag Link and Coupling Rod Dust Cover Spring ..	—	2	HAGALAID
*N.P.1083	Grease Cup Base Joint	—	4	HAGALEPT
N.P.1085	Steering Coupling Rod, fitted complete	105	0	HAGALOW
N.P.1086	Steering Drag Link, fitted complete	102	0	HAGALUNT

Parts not illustrated are indicated by an Asterisk

Rear Axle

List No.	Description.	Price. s.	d.	Code Word.
N.P.1100	Rear Axle and Spring Pads ..	400	0	HAIDING
N.P.1101	Rear Axle, fitted complete with Wheels (less Rubber Tyres) ..	2400	0	HAIDUKE
N.P.1102	Rear Axle Washers	7	6	HAILAKE
N.P.1103	Rear Axle Washer Set Screw ..	—	5	HAILEAK
N.P.1104	Rear Axle Nut	6	6	HAILIP
N.P.1105	Rear Wheel—bushed	408	0	HAILOCK
N.P.1106	Rear Wheel fitted with Brake Drum and Chain Wheel	611	6	HAILUPE
*N.P.1106A	Rear Wheel—bushed (Special Wide Rim)	484	0	HAILUMP
N.P.1107	Rear Wheel Bush	42	0	HAIMAZE
N.P.1108	Rear Wheel Inner Thrust Washer	6	0	HAIMET
N.P.1109	Rear Wheel Outer Thrust Washer $\frac{9}{32}''$	7	9	HAIMINE
N.P.1109A	Rear Wheel Outer Thrust Washer $\frac{5}{16}''$	8	6	HAIMKOVE
N.P.1109B	Rear Wheel Outer Thrust Washer $\frac{11}{32}''$	9	0	HAIMLAST
N.P.1110	Rear Wheel Cap	7	9	HAIMOUSE
N.P.1111	Brake Drum and Chain Wheel ..	175	6	HAIMUST
N.P.1112	Brake Drum Bolt with Castle Nuts and Split Pin	2	9	HAINAY
N.P.1113	Rear Wheel Dust Cover	7	6	HAINEXT
N.P.1114	Spring Pad	143	9	HAINISE
N.P.1115	Oil Box Cover	1	0	HAINOTE
N.P.1116	Plug, $\frac{1}{4}''$ Gas	—	2	HAINUTS
N.P.1117	Oil Box Cover Joint	—	5	HAIPAM
N.P.1118	Brake Fulcrum Pin complete ..	7	6	HAIPECK
N.P.1119	Brake Fulcrum Pin Nut	1	0	HAIPINT
N.P.1120	Brake Fulcrum Pin Head ..	1	0	HAIPOUR
N.P.1121	Brake Fulcrum Pin Bush	4	3	HAIPUSH
N.P.1122	Brake Fulcrum Pin Washer ..	1	6	HAIRAG
N.P.1123	Brake Shoe with lining—two halves	102	0	HAIREP
N.P.1123F	Brake Shoe complete	120	0	HAIRFAN
N.P.1124	Brake Lining, $20\frac{1}{2}'' \times 4'' \times \frac{3}{8}''$ ..	16	9	HAIRIPE
N.P.1125	Brake Lining Screw with Spring Washer and Faced Nut	—	3	HAIROUT
N.P.1126	Brake Shoe Relieving Spring Rod	1	6	HAIRUPT
N.P.1127	Brake Shoe Relieving Spring ..	—	6	HAISAMBO
N.P.1128	Brake Shoe Spring Collar (on Spring Pillar)	1	0	HAISENSE
N.P.1129	Brake Shoe Rubbing Plate ..	2	3	HAISIMP
N.P.1130	Bolt C'sk Head, $\frac{1}{2}'' \times 1\frac{3}{8}''$ with Spring Washer and Faced Nut, fixing Rubbing Plate to Brake Shoe)	—	3	HAISOAK
N.P.1131	Brake Shoe Pressure Plate ..	1	3	HAISULK
N.P.1132	Brake Shoe Pressure Plate Spring Pillar	—	8	HAITATE
N.P.1133	Brake Shoe Pressure Plate Spring	—	5	HAITEAT
*N.P.1134	Brake Shoe Spring Collar (on Spring Rod)	1	0	HAITIME
N.P.1135	Brake Cam with Washer, Castle Nut and Split Pin	13	6	HAITOUR
N.P.1136	Brake Lever, R.H.	12	0	HAITUNE
N.P.1137	Hand Brake Lever, L.H.	12	0	HAIVAGE
*N.P.1138	Foot Brake Lever, L.H.	12	0	HAIVEIL
*N.P.1139	Foot Brake Lever, R.H.	12	0	HAIVIPE
*N.P.1140	Brake Cam Felt Washer Spring ..	—	6	HAIVOLE

IT IS ESSENTIAL TO STATE WAGGON NUMBER WHEN ORDERING

Parts not illustrated are indicated by an Asterisk

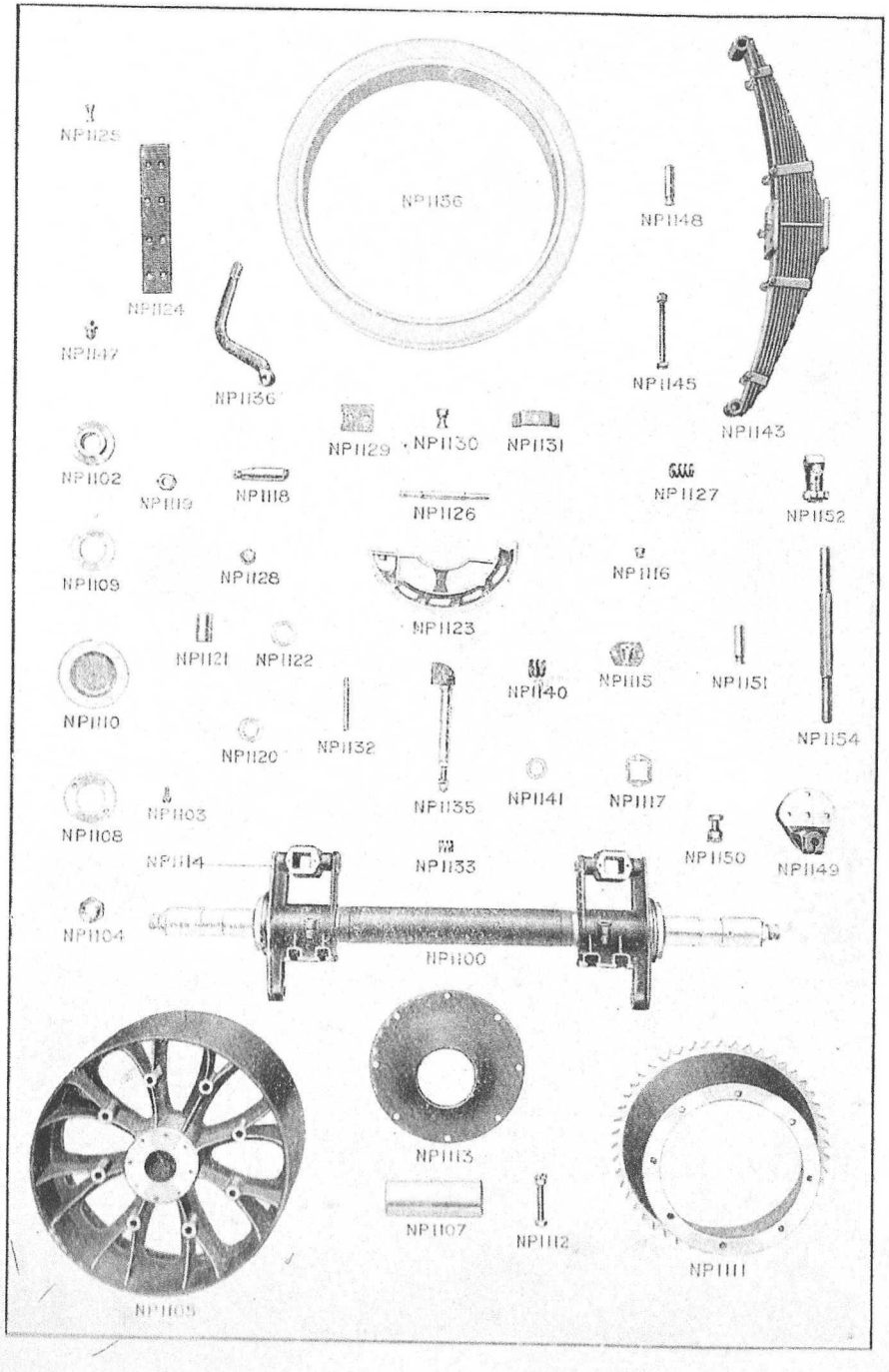

Parts not illustrated are indicated by an Asterisk

Rear Axle (*continued*)

List No.	Description.	Price. s.	Price. d.	Code Word.
N.P.1141	Brake Cam Felt Washer	—	4	HAIVUDE
*N.P.1142	Rear Spring—6 ton	70	0	HAIWANG
N.P.1143	Rear Spring—8 ton	76	0	HAIWEPT
*N.P.1144	Rear Spring Buckle Bolt with Nuts and Split Pin—6 ton	1	0	HAIWINE
N.P.1145	Rear Spring Buckle Bolt with Nuts and Split Pin—8 ton	1	0	HAIWOAD
*N.P.1146	Rear Spring Slipper, complete with Pin	13	6	HAIWUNT
N.P.1147	Grease Nipple	—	6	HAIZAMP
N.P.1148	Rear Spring Pin	1	0	HAIZEBRA
N.P.1149	Radius Rod Bracket with Bolts, Spring Washers and Nuts ..	18	6	HAIZICK
N.P.1150	Radius Rod Bracket Bolt with Spring Washers, Castle Nut and Split Pins	—	10	HAIZONO
N.P.1151	Radius Rod Pins	1	3	HAIZUNG
N.P.1152	Radius Bar Socket R.H. with Bolt, Spring Washer, Faced Nut and Grease Nipple	10	0	HAIKANG
N.P.1153	Radius Bar Socket, L.H. with Bolt, Spring Washer, Faced Nut and Grease Nipple	10	0	HAKENT
N.P.1154	Radius Rod	7	6	HAKIND
*N.P.1155	Radius Rod complete with Sockets	24	0	HAKOLA

For Prices of Chains see Page 87

Special Parts used in conjunction with Combined Hand and Foot Brake Gear

List. No.	Description.	Price. s.	Price. d.	Code Word.
*N.P.1156	Brake Shoe Packing Piece ..	5	0	HAKZOVEIMP
*N.P.1157	Brake Shoe Pressure Plate with Studs, Nuts and Split Pins ..	3	0	HAKZUME
*N.P.1158	Brake Cams with Washer, Nut and Split Pins	16	6	HAKZUMEBY
*N.P.1159	Brake Cam Spindle Ferrule ..	—	6	HAKZUMEFO
*N.P.1160	Spring Pad Plug	1	9	HAKZUMGAR
*N.P.1161	Spring Pad Plug Stud	1	0	HAKZUMHIP
*N.P.1162	Spring Pad Plug Washer with Copper Washer and Faced Nut	1	6	HAKZUMJOK
*N.P.1163	Brake Lever, L.H.	10	0	HAKZUMKIN
*N.P.1164	Brake Lever, R.H.	10	0	HAKZUMLAP

IT IS ESSENTIAL TO STATE WAGGON NUMBER WHEN ORDERING

Parts not illustrated are indicated by an Asterisk

Spare Parts for Super-Sentinel
Steam Waggons

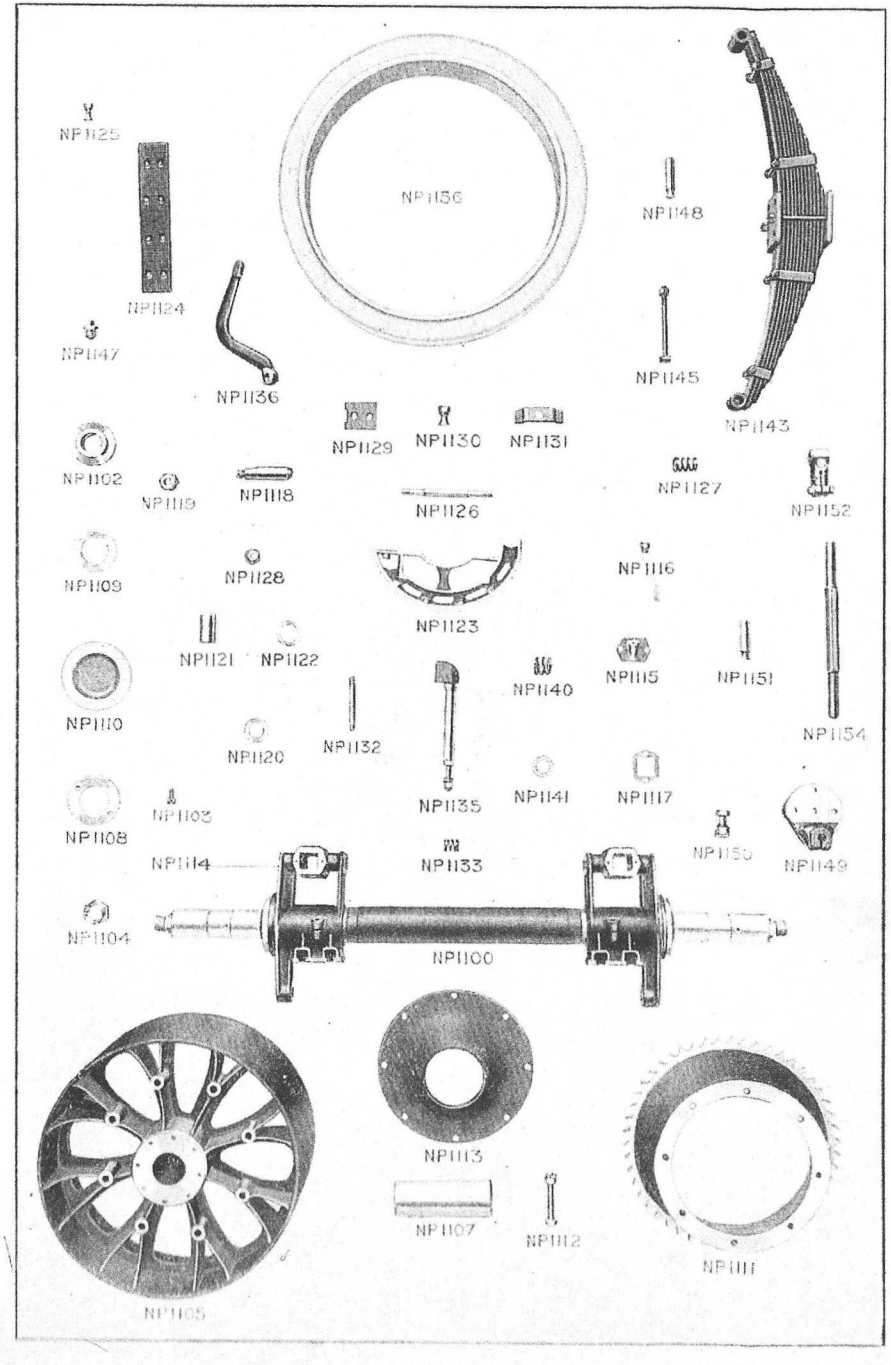

Parts not illustrated are indicated by an Asterisk

Hand and Foot Brake Gear

List No.	Description.	Price. s.	Price. d.	Code Word.
N.P.1166	Brake Rod Quadrant Bracket, complete	28	0	HALARBE
N.P.1167	Brake Rod Quadrant Bracket ..	11	6	HALBEATH
N.P.1168	Brake Rod Quadrant Bracket Bolt with Faced Nut and Spring Washer	1	0	HALCATH
N.P.1169	Brake Rod Quadrant Shaft with Castle Nut and Split Pins ..	7	0	HALDOLL
N.P.1170	Brake Rod Quadrant	5	6	HALFBEAM
N.P.1171	Brake Rod Quadrant Shaft Spring	—	4	HALFBOOT
N.P.1172	Brake Weigh Shaft Bracket ..	2	6	HALIBUT
N.P.1173	Hand Brake Weigh Shaft, complete	45	6	HALIDE
N.P.1174	Hand Brake Weigh Shaft	17	0	HALIDOM
N.P.1175	Foot Brake Weigh Shaft Sleeve ..	15	0	HALICUTIC
N.P.1176	Grease Nipple	—	6	HALIMEDA
N.P.1177	Brake Weigh Shaft Lever, R.H. with Bush and Faced Nut	2	0	HALITUOUS
N.P.1178	Brake Weigh Shaft Lever, L.H. with Faced Nut	2	3	HALLERIA
N.P.1179	Brake Weigh Shaft Inner Spring	—	5	HALLMOOT
N.P.1180	Brake Weigh Shaft Outer Spring	—	8	HALLSTAT
N.P.1181	Grease Retaining Washer	—	2	HALLUAM
N.P.1182	Brake Rod Equalizer	1	3	HALLUX
N.P.1183	Foot Brake Foot Lever Bracket ..	14	9	HALLWAY
N.P.1184	Bolt fitted Hex. $\frac{3}{4}'' \times 1\frac{7}{8}''$ with Spring Washer and Faced Nut	—	8	HALMAYES
N.P.1185	Foot Brake Foot Lever Gear, complete	40	0	HALORA
N.P.1186	Foot Brake Foot Lever with No. 13 Woodruff Key, Spring Washer and Faced Nut	6	6	HALONY
N.P.1187	Foot Brake Foot Lever Palm with Bolt, Spring Washer & Faced Nut	5	0	HALTERBI
N.P.1188	Foot Brake Foot Lever Shaft with Castle Nut and Split Pin ..	9	6	HAMARM
N.P.1189	Foot Brake Operating Lever ..	4	9	HAMBEAN
N.P.1190	Hand Brake Forward Rod with two Brake Rod Bushes	6	0	HAMCANNY
N.P.1191	Hand Brake Intermediate Rod with two Brake Rod Bushes	5	3	HAMDUMP
N.P.1192	Foot Brake Forward Rod with two Brake Rod Bushes	6	0	HAMFILTH
N.P.1193	Foot Brake Intermediate Rod with two Brake Rod Bushes	5	3	HAMGARTH
N.P.1194	Brake Rod Bush	—	2	HAMHACK
N.P.1195	Brake Rod Joint Pin with Thackeray Washer and Split Pin	—	5	HAMJOCK
N.P.1196	Brake Adjusting Rod No. 1—bushed	2	6	HAMLAMB
N.P.1197	Brake Adjusting Rod No. 2—bushed	2	6	HAMLOMP
	The following items are for Combined Hand and Foot Brake only			
*N.P.1198	Brake Rod Quadrant	5	6	HAMMANDS
*N.P.1199	Hand Brake Weighshaft	17	0	HAMMENTS
*N.P.1200	Hand Brake Forward Rod ..	15	6	HAMMICKS
*N.P.1201	Foot Brake Spring Adjuster ..	1	3	HAMMITE
*N.P.1202	Spring Adjuster Bolts with Nut and Spring Washers, fixing Adjuster to Foot Brake Rod	—	7	HAMMONT
*N.P.1203	Foot Brake Spring Washer ..	—	2	HAMMOPTY
*N.P.1204	Foot Brake Return Spring ..	—	9	HAMMUDE

IT IS ESSENTIAL TO STATE WAGGON NUMBER WHEN ORDERING

Parts not illustrated are indicated by an Asterisk

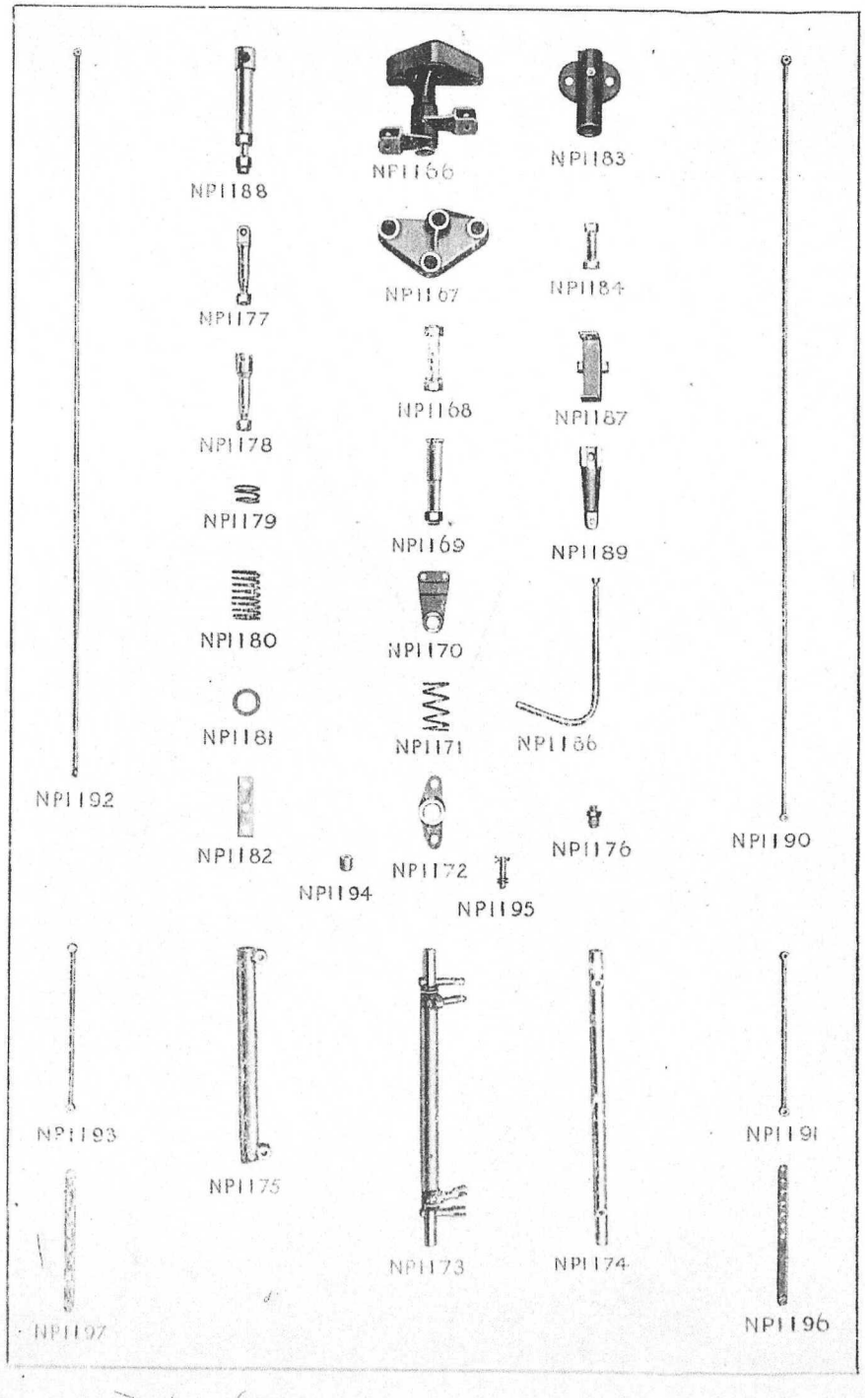

Parts not illustrated are indicated by an Asterisk

Pipes and Fittings

12ft. 6½in. Wheel Base

List No.	Description.	Price. s.	Price. d.	Code Word.
N.P.574	Safety Valve Discharge Pipe and Flange	25	6	GLOGYON
N.P.575	Safety Valve Discharge Band and Clip with Bolt, Nut and Washer	9	6	GLOGZIG
N.P.1220	Safety Valve Discharge Pipe Flange only	1	9	HANASK
N.P.1221	Safety Valve Drain Pipe with Coupling Nut and Collars	7	6	HANBIT
*N.P.1222	Safety Valve Drain Pipe Clip with Bolt, Nut and Washer	—	10	HANCOAT
N.P.1223	Cleaning Pipe with Coupling Nut and Collar wrapped	6	3	HANDOZ
*N.P.1224	Cleaning Pipe Clip with Bolt, Nut and Washer	—	10	HANELK
N.P.1225	Blower Pipe with Coupling Nut and Collar	6	0	HANFOOT
N.P.1226	Release Pipe—Stop Valve to Engine with Coupling Nuts and Collars	20	0	HANGOAD
N.P.1227	Auxiliary Valve Pipe with Coupling Nuts and Collars	6	0	HANHARD
N.P.1228	Injector Steam Pipe with Coupling Nuts and Collars	7	0	HANIBAT
N.P.1229	Steam to Ejector Pipe with Coupling Nuts and Collars	5	6	HANJAPE
N.P.1230	Main Steam Pipe and Flanges—Stop Valve to Engine, wrapped	26	9	HANKOKE
N.P.1231	Main Steam Pipe Flange	2	9	HANLISP
N.P.1232	Injector Overflow Pipe and Support Plate	9	6	HANMUST
N.P.1235	Injector Suction Pipe — No. 1 Injector End	23	6	HANPORT
N.P.1236	Nipple 1" Special	1	0	HANGUOD
N.P.1237	Injector Suction Pipe Clip ..	—	10	HANRUIN
N.P.1239	Injector Suction Pipe—No. 2 Tank End	26	0	HANTOUT
N.P.1240	Water Gauge Drain Pipe	4	9	HANUKIT
N.P.1241	Heater to Check Valve Pipe ..	12	6	HANVILE
N.P.1242	Pressure Gauge Pipe	7	0	HANWOOD
N.P.1243	Water Lifter Pipe No. 1 (Boiler End)	24	6	HANXIT
N.P.1244	Water Lifter Pipe No. 2, Lifter End	30	6	HANZING
N.P.1245	Pump Delivery Pipe No. 2, Pump End	11	0	HAPALAD
N.P.1246	Pump Delivery Pipe No. 1, Heater End	21	0	HAPBURG
N.P.1247	Pump Delivery Pipe Clip	1	9	HAPCAST
N.P.1249	Pump Suction Pipe No. 1, Pump End	29	0	HAPERT
*N.P.1250	Pump Suction Pipe Clip	1	9	HAPFOND
N.P.1252	Pump Suction Pipe Rubber Connection	5	6	HAPHOPE

IT IS ESSENTIAL TO STATE WAGGON NUMBER WHEN ORDERING

Parts not illustrated are indicated by an Asterisk

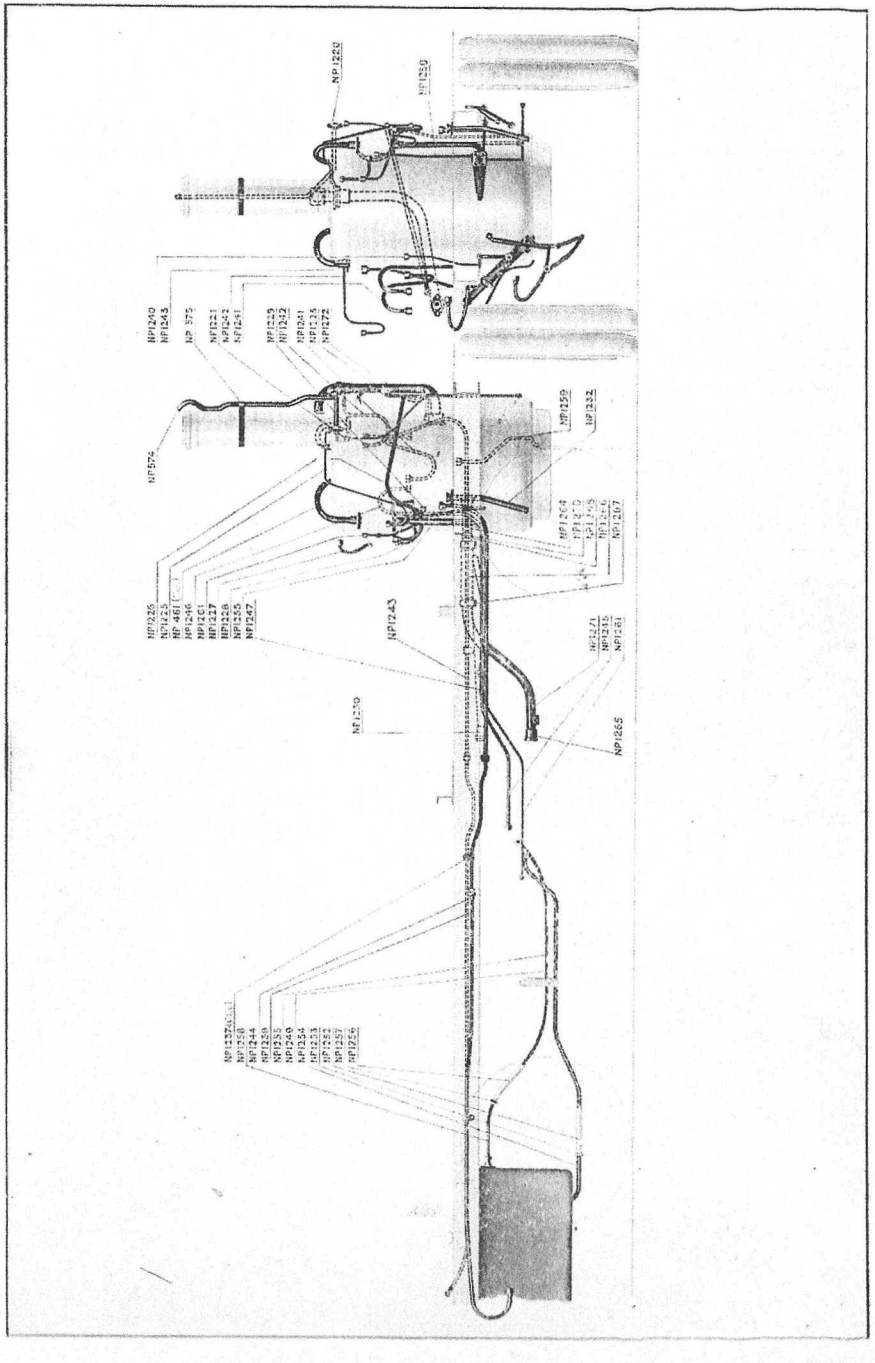

Parts not illustrated are indicated by an Asterisk

Pipes and Fittings (*continued*).

12ft. 6½in. Wheel Base

List No.	Description.	Price. s.	Price. d.	Code Word.
N.P.1253	Pump Suction Pipe Rubber Connection Clip	—	2	HAPITAG
N.P.1254	Pump Suction Pipe No. 2 Tank End	17	6	HAPJIMS
N.P.1255	Pump Return Pipe No. 1 Pump End	16	0	HAPKODA
N.P.1256	Pump Return Pipe Rubber Connection	2	9	HAPLAMD
N.P.1257	Pump Return Pipe Rubber Connection Clip	—	2	HAPMOT
N.P.1258	Pump Return Pipe No. 2 Tank End	4	3	HAPNELL
N.P.1259	Drain Pipe—Heater to Ashpan ..	5	9	HAPOSAT
*N.P.1260	Drain Pipe Clip only	1	0	HAPPOST
N.P.1261	Oil Pipe—Oil Pump to Stop Valve	15	0	HAPQUIM
*N.P.1262	Oil Pipe Clip	2	3	HAPRISE
N.P.1264	Exhaust Pipe No. 1—Heater End wrapped	23	0	HAPTAME
N.P.1265	Exhaust Pipe Flange only ..	3	0	HAPURSE
N.P.1266	Exhaust Pipe Rubber Connection	19	0	HAPVICK
N.P.1267	Exhaust Pipe Rubber Connection Clip	1	6	HAPWRAT
N.P.1268	Exhaust Pipe Clip	1	6	HAPJON
N.P.1270	Exhaust Pipe Clip Bracket ..	3	0	HAPZULT
N.P.1271	Exhaust Pipe No. 2 Engine End wrapped	18	6	HARAJOT
N.P.1272	Exhaust Pipe—Heater to Funnel ..	26	0	HARBUCK
N.P.1273	Steam to Cylinder Lubricator Heating Pipe	6	0	HARCELT
*N.P.1274	Exhaust Pipe Support	3	0	HARDENT
*N.P.1277	Coupling Nut, ½″	—	3	HARGAEL
*N.P.1278	Coupling Nut, ¾″	—	6	HARHOSK
*N.P.1279	Coupling Nut, 1″	—	9	HARIJAM
*N.P.1280	Coupling Nut, 1¼″	1	0	HARJOLT
*N.P.1281	Coupling Collar, ½″	—	2	HARKLIT
*N.P.1282	Coupling Collar, ¾″	—	3	HARLOAK
*N.P.1283	Coupling Collar, 1″	—	4	HARMAND
*N.P.1284	Coupling Collar, 1¼″..	—	6	HARNORE
*N.P.1285	Joint Washer, 5/16″ .. Per doz.	—	6	HAROFAS
*N.P.1286	Joint Washer, ½″ .. Per doz.	—	6	HARPEAT
*N.P.1287	Joint Washer, 11/16″ .. .. each	—	1	HARQUICK
*N.P.1288	Joint Washer, 1″	—	2	HARROST
*N.P.1289	Joint—Exhaust Pipe to Exhaust Pipe Bend	—	2	HARSALE
*N.P.1290	Joint—Exhaust Pipe to Engine ..	—	2	HARTUSK
*N.P.1291	Joint—Exhaust Pipe Heater to Funnel	—	2	HARUMOR
*N.P.1292	Joint—for Safety Valve Discharge Pipe	—	3	HARVAST

IT IS ESSENTIAL TO STATE WAGGON NUMBER WHEN ORDERING

Parts not illustrated are indicated by an Asterisk

Spare Parts for Super-Sentinel
Steam Waggons

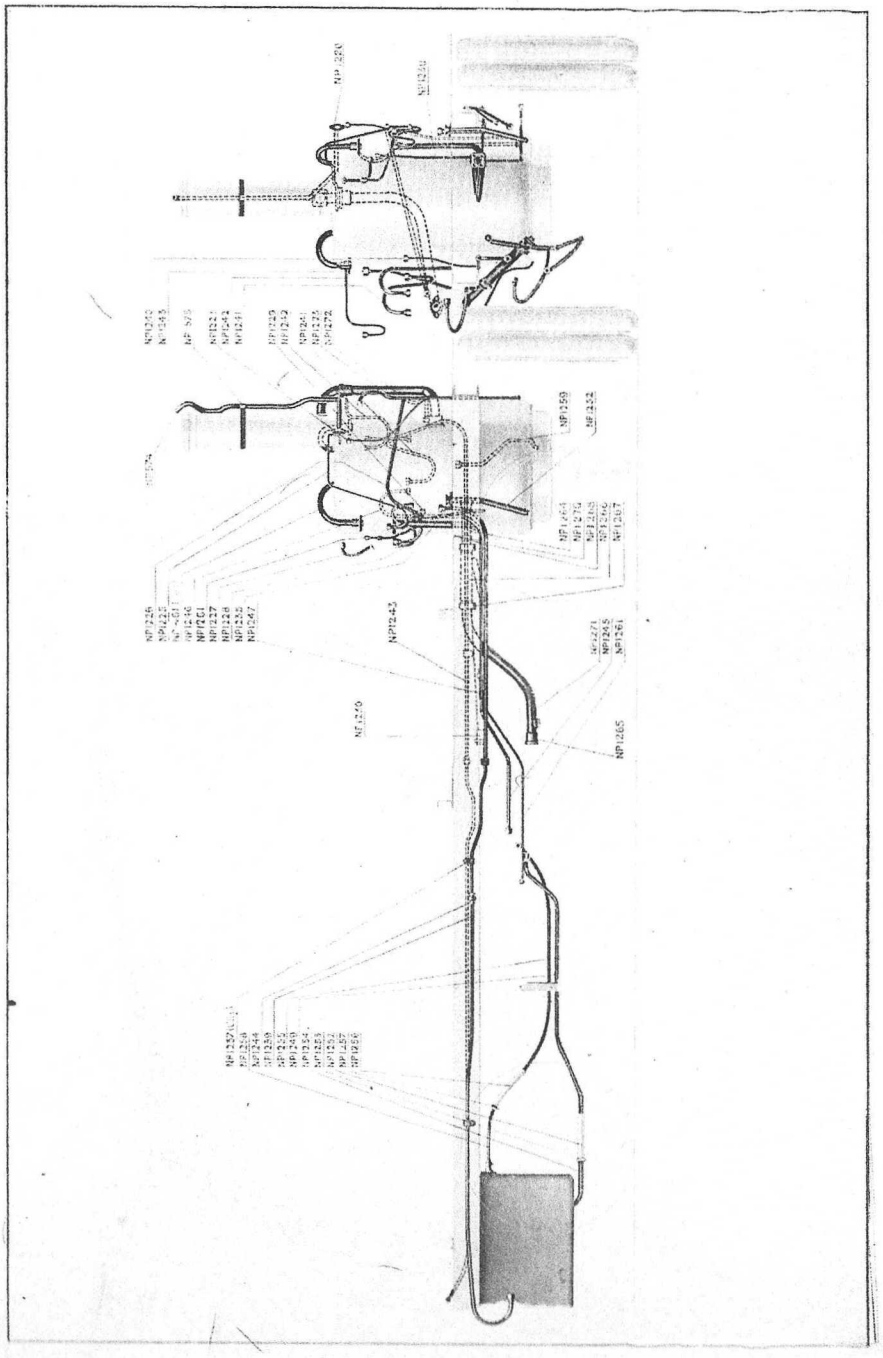

Parts not illustrated are indicated by an Asterisk

Pipes and Fittings. Special to 10ft. 9½in. Wheel Base.

List No.	Description.	Price. s.	Price. d.	Code Word.
N.P.1300	Main Steam Pipe—Stop Valve to Engine, 1′ 9″ shorter than Standard, wrapped	25	0	HASABAT
N.P.1301	Injector Suction Pipe No. 1. 1′ 9″ shorter than Standard	20	0	HASBOUND
N.P.1302	Water Lifter Pipe No. 1. 1′ 9″ shorter than Standard	20	0	HASCOLT
N.P.1303	Pump Delivery Pipe No. 1. 1′ 9″ shorter than Standard	16	6	HASDONP
N.P.1304	Oil Pipe. 1′ 9″ shorter than Standard	12	6	HASEEK
N.P.1305	Exhaust Pipe No. 1. Heater End wrapped	21	0	HASFALT
N.P.1306	Exhaust Pipe No. 2. Engine End	18	6	HASGORE
	All other pipes as 12′ 6½″ Wheel Base.			

Pipes and Fittings. Special to 14ft. 3½in. Wheel Base.

List No.	Description.	Price. s.	Price. d.	Code Word.
N.P.1310	Main Steam Pipe—Stop Valve to Engine. 1′ 9″ longer than Standard, wrapped	28	6	HASHORT
N.P.1311	Injector Suction Pipe No. 2. 1′ 9″ longer than Standard	29	6	HASINCE
N.P.1312	Pump Delivery Pipe No. 2. 1′ 9″ longer than Standard	16	0	HASJUBE
N.P.1313	Water Lifter Pipe No. 2. 1′ 9″ longer than Standard	34	0	HASKITE
N.P.1314	Oil Pipe. 1′ 9″ longer than Standard	16	6	HASLOAK
N.P.1315	Exhaust Pipe No. 1. Heater End	27	6	HASMINT
N.P.1316	Pump Return Pipe No. 1. 1′ 9″ longer than Standard	19	0	HASNOWT
N.P.1317	Pump Delivery Pipe No. 1. 1′ 9″ longer than Standard	25	6	HASPINK
	All other Pipes as 12′ 9½″ Wheel Base.			

Footplates, Apronplate and Mudguards

List No.	Description.	Price. s.	Price. d.	Code Word.
N.P.1350	Front Footplate	39	6	HATALB
N.P.1351	Rear Footplate	49	6	HATBAN
N.P.1352	Apron Plate, complete with Stanchions but without Doors ..	183	0	HATCOTE
N.P.1353	Apron Plate complete with Stanchions and Doors	247	6	HATCOLD
N.P.1354	Rear Stanchion, R.H.	10	0	HATDAME
N.P.1355	Rear Stanchion, L.H.	10	0	HATDENT
N.P.1356	Front Stanchion	12	0	HATDIM
N.P.1357	Canopy Lamp Bracket, L.H. ..	1	6	HATEVE
N.P.1358	Canopy Lamp Bracket, R.H. ..	1	6	HATFIE
N.P.1359	Cab Door, R.H. with Hinges ..	32	0	HATFIND
N.P.1360	Cab Door, L.H. with Hinges ..	32	0	HATFORE
N.P.1365	Cab Door Hinge	—	9	HATHAM
N.P.1366	Cab Door Catch, R.H.	—	9	HATHEIM
N.P.1367	Cab Door Catch, L.H.	—	9	HATHIME

IT IS ESSENTIAL TO STATE WAGGON NUMBER WHEN ORDERING

Prices not illustrated are indicated by an Asterisk

Spare Parts for Super-Sentinel
Steam Waggons

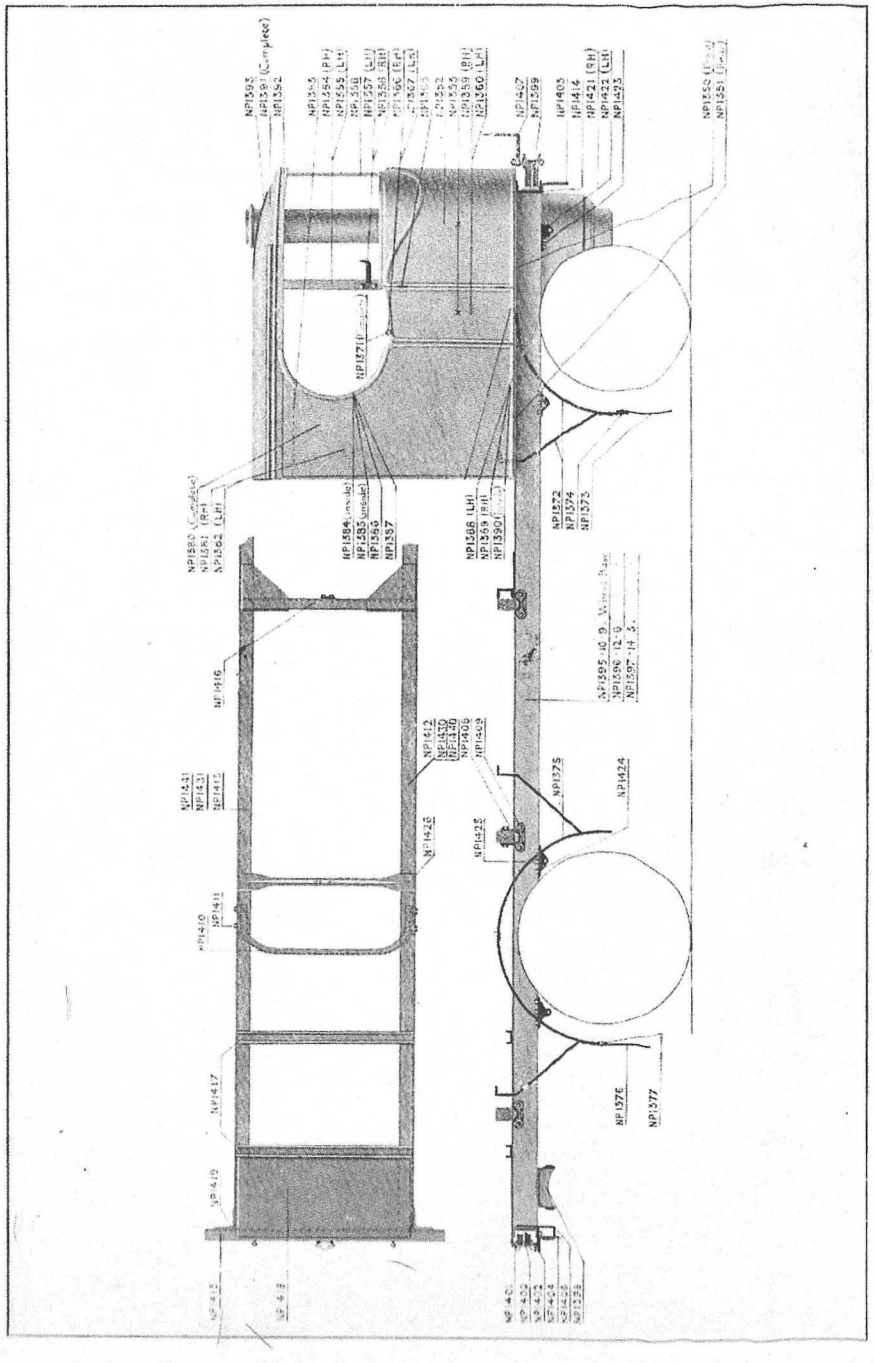

Parts not illustrated are indicated by an Asterisk

Footplates, Apronplate & Mudguards (*continued*).

List No.	Description.	Price. s.	Price. d.	Code Word.
*N.P.1368	Cab Door Catch Washer	—	1	HATJAM
*N.P.1369	Cab Door Catch Spring	—	2	HATJEMP
*N.P.1370	Cab Door Catch Distance Piece	—	1	HATJIP
N.P.1371	Cab Door Catch—fitted complete R.H. or L.H.	1	3	HATKAMP
N.P.1372	Front Mudguard—complete with Flap and Support	24	0	HATKEND
N.P.1373	Front Mudguard Flap	2	0	HATKOUP
N.P.1374	Front Mudguard Flap Fixing Plate	1	0	HATKIND
N.P.1375	Rear Mudguard—complete with Flap and Support	37	0	HATLAMB
N.P.1376	Rear Mudguard Flap	2	0	HATLEP
N.P.1377	Rear Mudguard Flap Fixing Plate	1	0	HATLINT

Cab and Canopy

List No.	Description.	Price. s.	Price. d.	Code Word.
N.P.1380	Canopy and Bunker complete ..	800	0	HATLOMB
N.P.1381	Bunker Wing, R.H.	47	0	HATLUMP
N.P.1382	Bunker Wing, L.H.	47	0	HATMAG
N.P.1383	Wing and Canopy Plate	1	6	HATMENT
N.P.1384	Cab Wing Curved Cope Iron, L.H. (Inside Cab)	3	0	HATMIND
N.P.1385	Cab Wing Curved Cope Iron, R.H. (Inside Cab)	3	0	HATMOSS
N.P.1386	Cab Wing Curved Cope Iron, L.H. (Outside Cab)	3	0	HATMUTE
N.P.1387	Cab Wing Curved Cope Iron, R.H. (Outside Cab)	3	0	HATNAT
N.P.1388	Cab Wing Bottom Cope Iron, L.H.	1	6	HATNEPT
N.P.1389	Cab Wing Bottom Cope Iron, R.H.	1	6	HATNIGHT
N.P.1390	Cab Wing Bottom Inside Iron, L.H.	1	9	HATNOPE
N.P.1391	Canopy Roof Complete	150	0	HATOBE
N.P.1392	Canopy Ashbend only	23	0	HATPAM
N.P.1393	Canopy Protection Plate ..	3	0	HATPET
N.P.1394	Canopy Flame Guard	5	0	HATPIMP
*N.P.1394 A	Canopy Sliding Door Springs ..	—	2	HAXART
*N.P.1394 B	Driver's Seat and Tool Box ..	46	0	HAXBORD
*N.P.1394 C	Stoker's Seat and Tool Box ..	22	6	HAXCONK
*N.P.1394 D	Cushion Spring Seat, 19″ × 14″ ..	18	6	HAXDID
*N.P.1394 E	Cushion Spring Seat, 16″ × 14″ ..	18	6	HAXELB
*N.P.1394 F	Seat Supporting Irons	3	6	HAXFIND
*N.P.1394 G	Bunker Front Cope Iron	2	9	HAXGOAD
*N.P.1394 H	Bunker Front Bottom Iron ..	4	6	HAXHOD
*N.P.1394 I	Bunker Front and Wing Iron, R.H.	3	9	HAXIMAN
*N.P.1394 J	Bunker Front and Wing Iron, L.H.	2	0	HAXJUDE
*N.P.1394 K	Canopy Side Curtain	5	6	HAXJROP
*N.P.1394 L	Canopy Curtain Rod	1	0	HAXLOOM
*N.P.1394 M	Inspection Oil Lamp Bracket (on Bunker)	1	0	HAXMOIL
*N.P.1394 N	Canopy Flame Guard (Large Type)	5	6	HAXMUD
*N.P.1394 O	Canopy Protection Plate (Large Type)	5	0	HAXMYLE

IT IS ESSENTIAL TO STATE WAGGON NUMBER WHEN ORDERING.

Parts not illustrated are indicated by an Asterisk

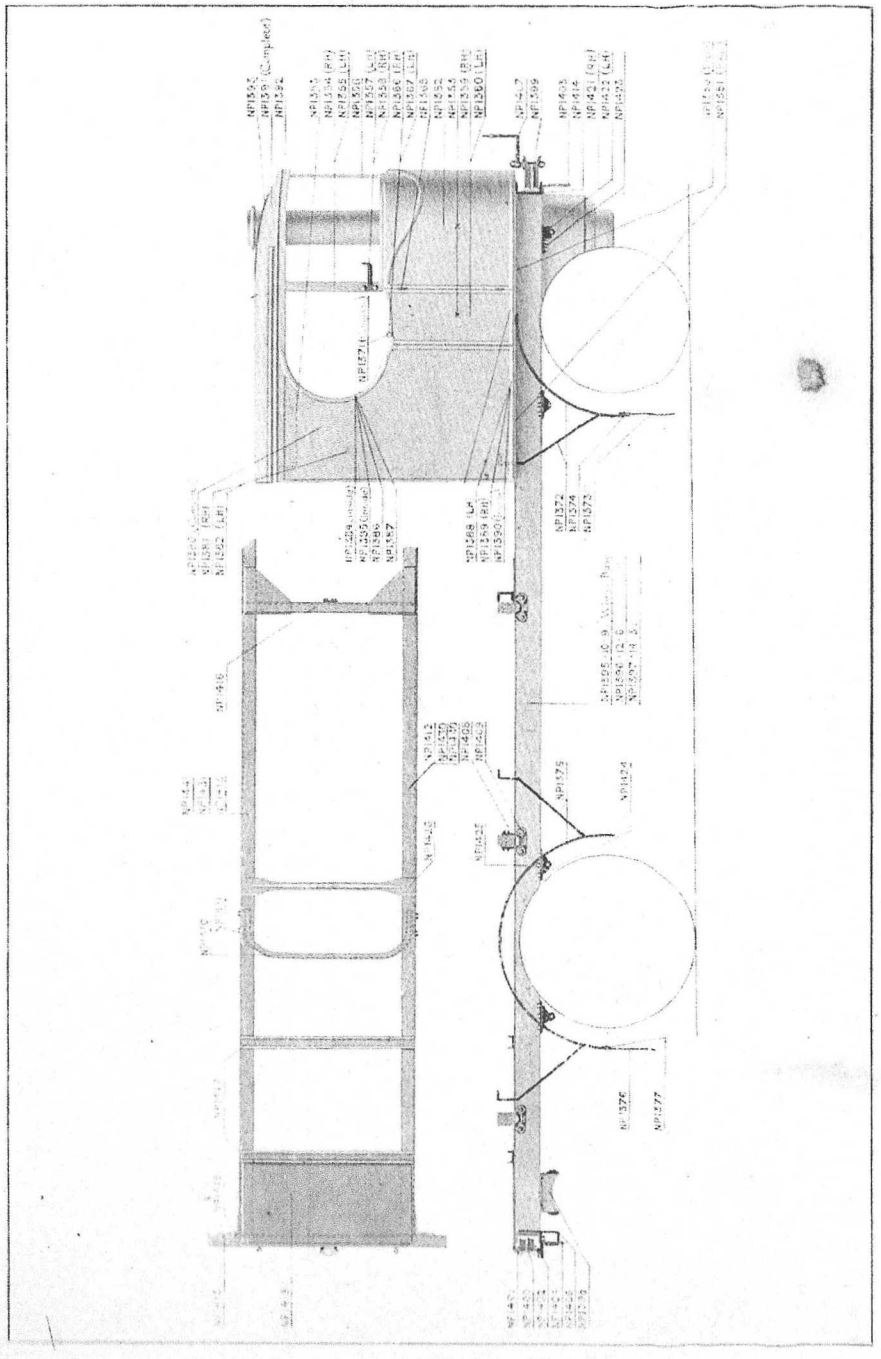

Parts not illustrated are indicated by an Asterisk

Frame and Mountings

List No.	Description.	Price. s.	Price. d.	Code Word.
N.P.1395	Frame, complete, 10′ 9½″ Wheel Base	450	0	HATRAMP
N.P.1396	Frame, complete, 12′ 6½″ Wheel Base	454	0	HATREG
N.P.1397	Frame, complete, 14′ 3½″ Wheel Base	458	0	HATRING

N.B.—Frames complete comprise R. and L.H. Side Channel, Front Cross Channel, Rear Cross Channel, Engine Suspension Channel, Gussets, Angle Cleats, Rivets and Bolts.

N.P.1398	Hose Carrying Bracket	8	6	HATROUR
N.P.1399	Front Drawbar Bracket	14	9	HATSAMBO
N.P.1400	Rear Drawbar Bracket ..	13	6	HATSECT
N.P.1401	Drawbar Bracket Pin with Chain and Cotter	3	6	HATSINE
N.P.1402	Safety Chain Bracket	2	0	HATSORE
N.P.1403	Front Number Plate and Supports	4	0	HATSUM
N.P.1404	Rear Number Plate and Supports	4	0	HATTAME
N.P.1406	Tail Lamp Bracket (on Frame) ..	2	6	HATTING
N.P.1407	Front Lamp Bracket with Stud, 2 Nuts and 2 Spring Washers .. (In Drawbar Bracket)	8	6	HATTOBE
N.P.1408	Holding Down Foot	1	6	HATTOMP
N.P.1409	Holding Down Bracket	1	6	HATTUB
N.P.1410	Tank Front Steady Channel ..	10	0	HATYAMP
N.P.1411	Bolt—½″ × 1¼″ Black Hex. with Spring Washer and Faced Nut, Fixing Channel to Frame ..	—	3	HATVEIN
N.P.1412	R.H Side Channel, 19′ 1⅝″ long ..	65	0	HATWAG
N.P.1413	L.H. Side Channel, 19′ 1⅝″ long ..	65	0	HATWAME
N.P.1414	Front Cross Channel, 4′ 3¼″ long ..	21	0	HATWENT
N.P.1415	Rear Cross Channel, 4′ 7¾″ long ..	22	0	HATWINE
N.P.1416	Engine Suspension Channel, 3′ 5¼″ long	10	0	HATWOUND
N.P.1417	Tank Suspension Channel, 3′ 5¼″ long	6	6	HAZAM
N.P.1418	Rear Gusset	6	6	HATZIME
N.P.1419	Angle Cleat	3	0	HATZINT
N.P.1420	Bolt—Fittea Hex. ⅝″ × 1½″ with Spring Washer and Faced Nut, for Front Cleat	—	6	HATZOME
N.P.1421	Front Spring Front Bracket, R.H.	16	9	HAUBARD
N.P.1422	Front Spring Front Bracket, L.H.	16	9	HAUBENT
N.P.1423	Bolt—Fitted Hex. 13/16″ × 1⅞″ with Spring Washer and Faced Nut, Fixing Bracket to Frame ..	—	8	HAUBINE
N.P.1424	Spring Slipper Plate	6	0	HAUBOUT
*N.P.1424A	Spring Slipper Stop Plate	1	6	HAUBOX
*N.P.1424B	Spring Slipper Stop Bolt and Nut	—	6	HAUBUN
N.P.1425	Bolt—Fitted, c'sk, 13/16″ × 2¼″ with Spring Washer and Faced Nut, Fixing Plate to Frame	—	6	HAUBUMP
N.P.1426	Frame Cross Stay (one only) ..	7	0	HAUCAN
N.P.1427	Engine Suspension Channel Stiffener, R.H. or L.H.	7	6	HAUDUMP
N.P.1430	R.H. Side Channel, 20′ 10⅝″ long ..	69	6	HAVANA
N.P.1431	L.H. Side Channel, 20′ 10⅝″ long ..	69	6	HAVBAG
N.P.1440	R.H. Side Channel, 22′ 7⅝″ long ..	74	0	HAVINCE
N.P.1441	L.H. Side Channel, 22′ 7⅝″ long ..	74	0	HAVJOAN

IT IS ESSENTIAL TO STATE WAGGON NUMBER WHEN ORDERING

Parts not illustrated are indicated by an Asterisk

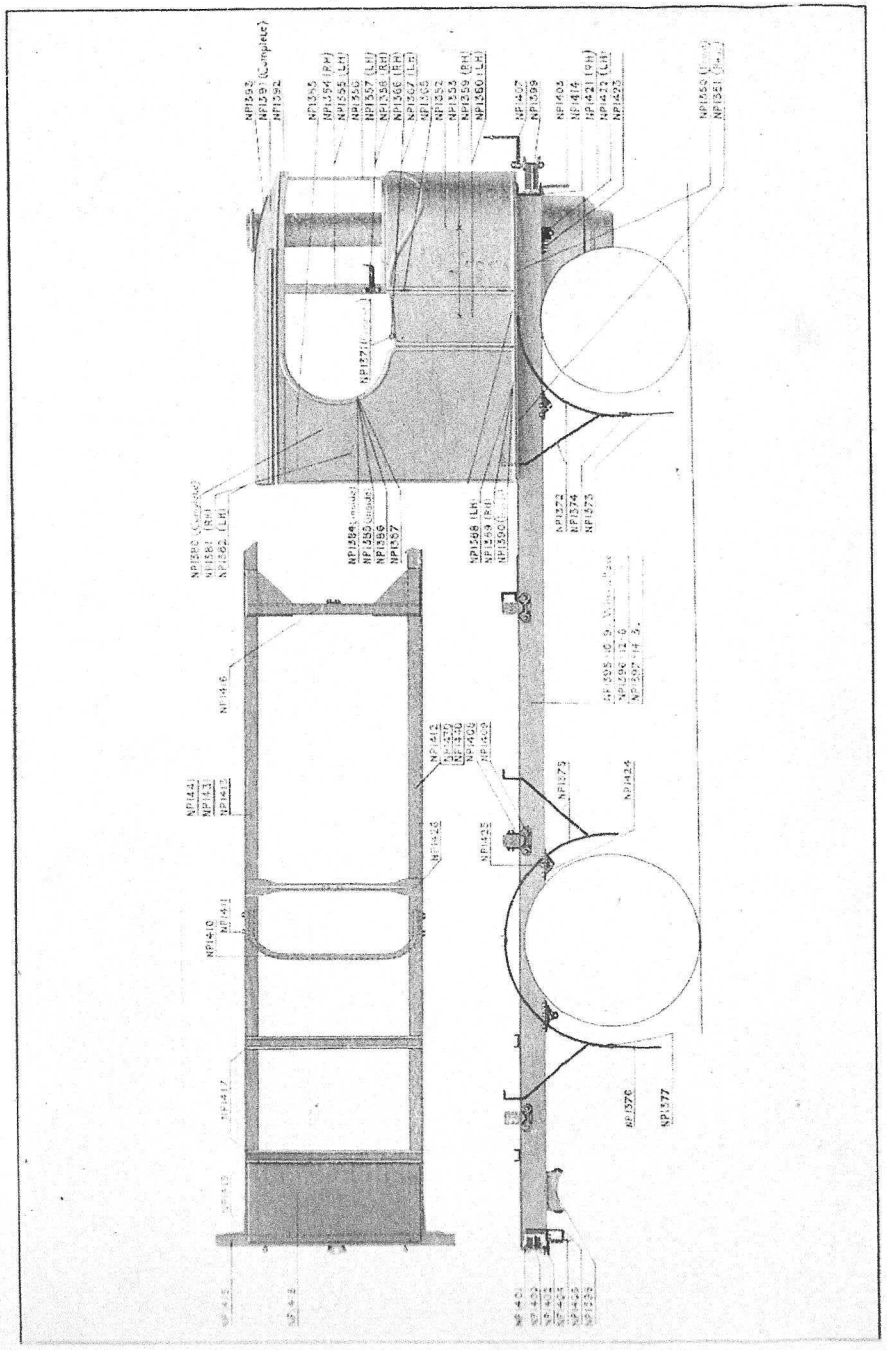

Parts not illustrated are indicated by an Asterisk

Body Ironwork for Standard "Super-Sentinel"

List No.	Description.	Price. s.	Price. d.	Code Word.
*N.P.1470	Side and Tailboard Hinges No. 1, for 16″ Hinged Side	10	0	HAYARD
*N.P.1471	Side and Tailboard Hinges No. 2, for 20″ Hinged Side	10	6	HAYBOX
*N.P.1472	Side and Tailboard Hinges No. 3, for 28″ Hinged Side	13	0	HAYCOON
*N.P.1473	Side and Tailboard No. 4, for 36″ Hinged Side	15	0	HAYDAG
*N.P.1474	Side and Tailboard No. 5, for 12″ Hinged Side	9	6	HAYEAL
*N.P.1475	Side and Tailboard No. 6, for 24″ Hinged Side	12	0	HAYFAIN
*N.P.1476	Centre Side Hinge for Platform Waggons	2	6	HAYGIRL
*N.P.1477	Corner Hinge for Platform Waggons	2	6	HAYHOPT
*N.P.1478	Centre Back Hinge, L.H. for Platform Waggons	2	0	HAYIEND
*N.P.1479	Centre Back Hinge, R.H. for Platform Waggons	2	0	HAYZUNTA
*N.P.1480	Fixed Side Support No. 1, for 16″ Fixed Side	10	0	HAYKAMT
*N.P.1481	Fixed Side Support No. 2, for 20″ Fixed Side	10	6	HAYLUDO
*N.P.1482	Fixed Side Support, No. 3, for 28″ Fixed Side	13	0	HAYMOAT
*N.P.1483	Fixed Side Support No. 4, for 36″ Fixed Side	15	0	HAYNASK
*N.P.1484	Fixed Side Support No. 5, for 48″ Fixed Side	16	6	HAYONDS
*N.P.1485	Fixed Side Support No. 6, for 12″ Fixed Side	9	6	HAYPUCE
*N.P.1486	Roping Hook	2	0	HAYQUAM
*N.P.1487	Waggon Platform Holding Down Brackets	1	6	HAYRIAL
*N.P.1488	Centre Cross Bearer Brackets ..	1	0	HAYSOUL
*N.P.1489	End Cross Bearer Brackets ..	1	0	HAYTALK

IT IS ESSENTIAL TO STATE WAGGON NUMBER WHEN ORDERING

Parts not illustrated are indicated by an Asterisk

Body Ironwork for 3-way Tipping "Super-Sentinel"

List No.	Description.	Price. s.	Price. d.	Code Word.
*N.P.1490	Tailboard Hinge, No. 1 for 16″ Tailboard	7	0	HAXAID
*N.P.1491	Tailboard Hinge, No. 2 for 20″ ditto	7	6	HAZBOLD
*N.P.1492	Tailboard Hinge, No. 3 for 28″ ditto	9	6	HANCONS
*N.P.1493	Tailboard Hinge, No. 4 for 32″ ditto	11	0	HANDOCK
*N.P.1494	Tailboard Hinge, No. 5 for 24″ ditto	8	6	HAZECT
*N.P.1495	Tipping Side Hinge Bracket ..	2	6	HANFOOT
*N.P.1496	Tipping Platform Stop Bracket ..	2	3	HAZGILL
*N.P.1497	Tipping Side Hinge Bar No 1 for 28″ Side	14	6	HAZHOZ
*N.P.1498	Tipping Side Hinge Bar No. 2 for 20″ Side	13	0	HAZIPPER
*N.P.1499	Tipping Side Hinge Bar No. 3 for 24″ Side	13	6	HAZJOKE

Body Ironwork for Standard Brewers' Body

List No.	Description.	Price. s.	Price. d.	Code Word.
*N.P.1500	Brewers' Body Side Stanchions ..	13	9	HAZKATE
*N.P.1501	Brewers' Body Rear Stanchions ..	10	6	HAZLITE
*N.P.1502	Cross Chain Hook	3	0	HAZMUNE
*N.P.1503	Chain Brackets	1	0	HAZNALC
*N.P.1504	Back Corner Stays	13	0	HAZORID
*N.P.1505	Front Corner Stays	13	0	HAZPANT
*N.P.1506	Female Hinge	7	0	HAZQUOK
*N.P.1507	Male Hinge	7	0	HAZRIME
*N.P.1508	Hinge Pin with Chain	2	6	HAZSUCH

IT IS ESSENTIAL TO STATE WAGGON NUMBER WHEN ORDERING

Parts not illustrated are indicated by an Asterisk

Trailer Brake Gear

List No.	Description.	Price. s.	Price. d.	Code Word.
N.P.1550	Trailer Brake Handle	3	6	JABABOS
N.P.1551	Trailer Brake Screw	5	0	JABACOL
N.P.1552	Trailer Brake Spindle Steady and Bunker Front	2	3	JABADAM
N.P.1553	Trailer Brake Nut and Stirrup ..	6	6	JABAFAM
N.P.1554	Trailer Brake Stirrup Guide ..	1	0	JABAGAJ
N.P.1555	Trailer Brake Stirrup Guide Packing Piece	—	6	JABAHUK
N.P.1556	Trailer Brake Rope and Eye ..	11	6	JABAZIX
N.P.1557	Trailer Brake Rope Coupling Hook	5	6	JABAKIN
N.P.1558	Trailer Brake Rope Clamp with Bolts	2	6	JABALUB
N.P.1559	Trailer Brake Rope Pulley ..	1	0	JABAMAK
N.P.1560	Trailer Brake Rope Pulley Bracket	2	3	JABANIT
N.P.1561	Trailer Brake Rope Eye Bolt with Spring Washer and Faced Nut	1	8	JABAPOG
N.P.1562	Trailer Brake Gear complete ..	46	6	JABAQUIT

IT IS ESSENTIAL TO STATE WAGGON NUMBER WHEN ORDERING

Parts not illustrated are indicated by an Asterisk

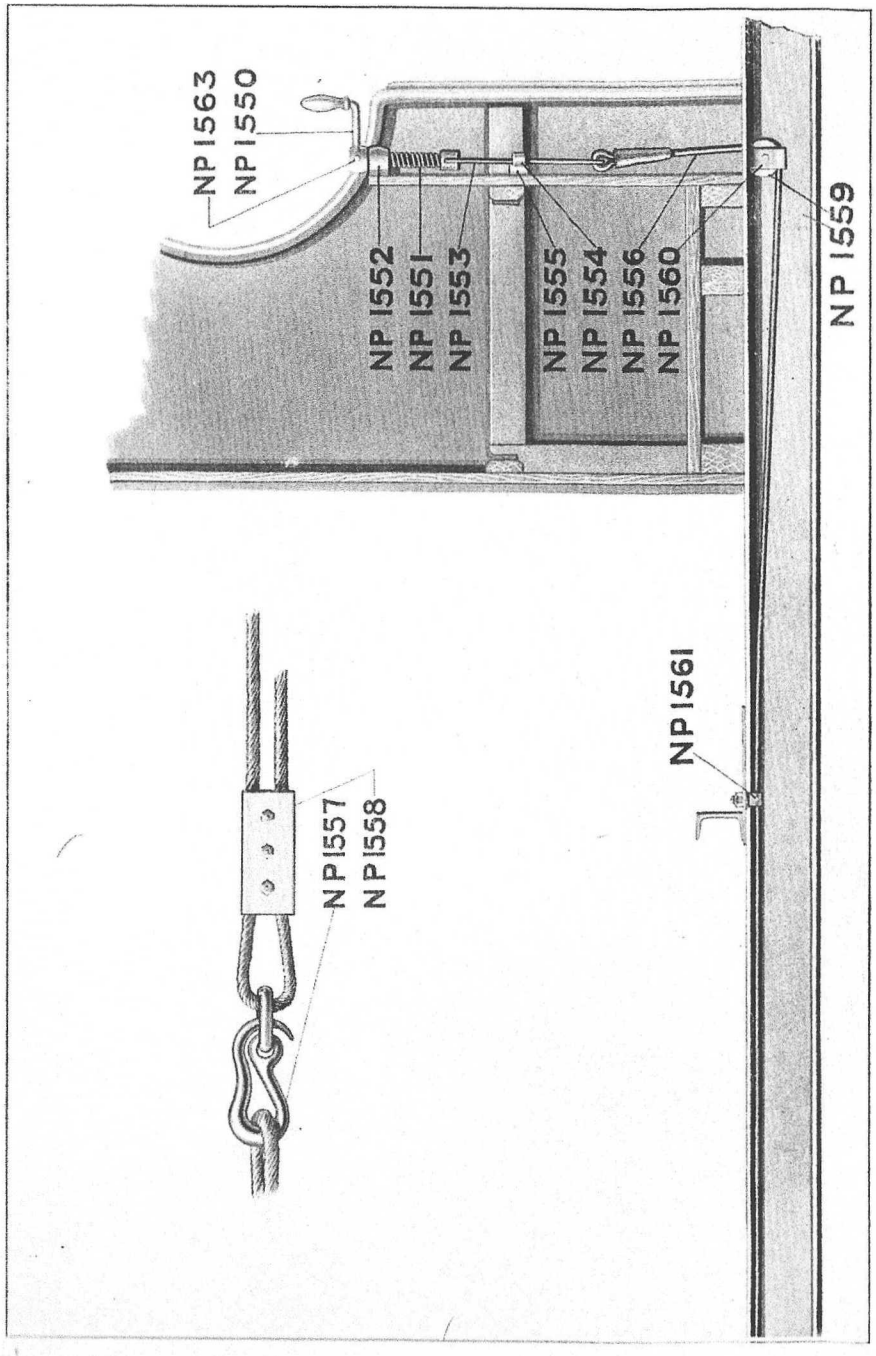

Parts not illustrated are indicated by an Asterisk

Parts, Special to Three-way Tipping Waggons

Tipping Frame

List No.	Description.	Price. s.	Price. d.	Code Word.
N.P.1699	Tipping Cylinder Support Channel	10	6	JACABUT
N.P.1700	R.H. Side Channel	57	0	JACALLOW
N.P.1701	L.H. Side Channel	57	0	JACBALD
N.P.1702	Front Cross Channel	19	6	JACDEED
N.P.1703	Front Pivot Pin Support and Engine Bearer Channel	16	6	JACELTIC
N.P.1704	Rear Cross Channel	15	9	JACFARM
N.P.1705	L.H. Tipping Front Pivot Support Channel	19	0	JACGOLD
N.P.1706	R.H. Tipping Front Pivot Support Channel	19	0	JACHAFT
N.P.1707	Front Pivot Support Channel Bolt (securing Channel to Frame) with Spring Washer and Faced Nut	—	7	JACINTA
N.P.1710	L.H. Front Pivot Suppert Angle	1	9	JACKILT
N.P.1711	R.H. Front Pivot Support Angle	1	9	JACLOOK
N.P.1712	Front Pivot Support Angle Bolt, with Spring Washer and Faced Nut	—	6	JACMALT
N.P.1713	Front Pivot Support Angle Bolt, with Spring Washer and Faced Nut	—	9	JACNOIL
N.P.1714	Hose Bracket Extension Plate	3	0	JACONIC
N.P.1715	Hose Carrying Bracket	8	6	JACPANT
*N.P.1716	Rear Number Plate and Support..	4	0	JACQUAN
*N.P.1717	Rear Drawbar Bracket only ..	8	6	JACROLL
N.P.1718	Suspension Plate for Tipping Injector	5	6	JACSTAN
N.P.1721	Rear Bottom Gusset Plate ..	5	3	JACVIOL
N.P.1722	Engine Bearer Channel Gusset Plates	2	6	JACWOMP
N.P.1723	Angle Iron—Tipping Cylinder Support Channel Cleats	2	6	JACXIT
N.P.1724	Angle Iron—Front Cross Channel Cleats	2	9	JACYLIC
N.P.1725	Bolts, $\frac{11}{16}'' \times 1\frac{1}{2}''$, fitted with Spring Washer and Faced Nut, fixing Front Cleats	—	6	JACYREN
N.P.1727	Rear Top Gusset Plates, L.H. ..	9	6	JACZAT
N.P.1728	Rear Top Gusset Plates, R.H. ..	9	6	JACZOMA
N.P.1729	Tipping Crosshead	175	6	JADAUNT
N.P.1730	Tipping Rear Pivot Bracket, L.H.	37	6	JADAXTER
N.P.1731	Tipping Rear Pivot Bracket, R.H.	37	6	JADAZAM

IT IS ESSENTIAL TO STATE WAGGON NUMBER WHEN ORDERING

Parts not illustrated are indicated by an Asterisk

Spare Parts for Super-Sentinel
Steam Waggons

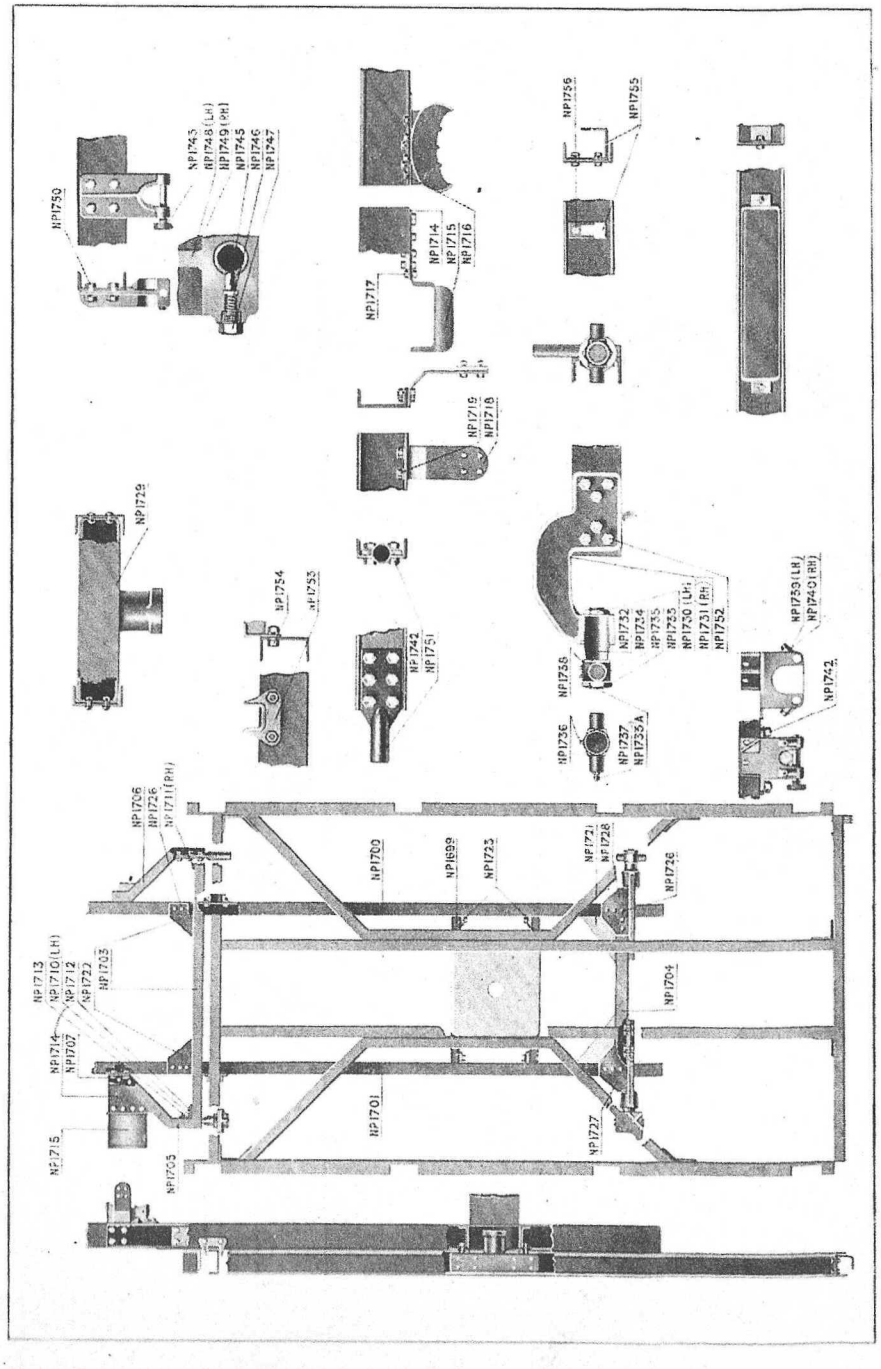

Parts not illustrated are indicated by an Asterisk

3-way Tipping Frame (*continued*)

List No.	Description.	Price. s.	Price. d.	Code Word.
N.P.1732	Tipping Rear Pivot Pin	19	6	JADBAND
N.P.1733	Tipping Rear Pivot Pin Nut ..	3	0	JADBARK
N.P.1733A	Tipping Rear Pivot Pin and Nut	23	6	JADBAST
N.P.1734	Tipping Rear Pivot	22	0	JADCAIN
N.P.1735	Tipping Rear Pivot Nut	3	0	JADCELLO
N.P.1736	Set Screw, $\frac{1}{4}'' \times \frac{1}{2}''$, with Spring Washer for fixing Locking Spring	—	3	JADCURT
N.P.1737	Grease Nipple	—	6	JADDAM
N.P.1738	Rear Pivot Locking Spring ..	1	0	JADDEFT
N.P.1739	Tipping Platform Rear Pivot Bracket L.H.	33	6	JADDISC
N.P.1740	Tipping Platform Rear Pivot Bracket R.H.	33	6	JADDOLT
N.P.1741	Tipping Platform Support Angle ..	2	0	JADDUSK
N.P.1742	Platform Rear Pivot Bracket Bolt with Spring Washer and Faced Nut	—	9	JADEAN
N.P.1743	Tipping Pivot Locking Pin and Chain	4	6	JADEEPS
N.P.1744	Tipping Pivot Locking Pin Chain	1	9	JADEITY
N.P.1745	Tipping Pivot Locking Pin Stop Pin	—	3	JADEUCE
N.P.1746	Front Pivot Locking Spring ..	—	2	JADFAKE
N.P.1747	Plug, $\frac{1}{4}''$ Gas	—	2	JADFEND
N.P.1748	Tipping Platform Front Pivot Bracket, L.H.	27	0	JADFISK
N.P.1749	Tipping Platform Front Pivot Bracket, R.H.	27	0	JADFORK
N.P.1750	Platform Front Pivot Bracket Bolt, with Spring Washer and Faced Nut	—	6	JADFULT
N.P.1751	Tipping Front Pivot Pin	13	6	JADHARP
N.P.1752	Front Pivot Pin Bolt with Spring Washer and Faced Nut	—	9	JADGENT
N.P.1753	Tipping Platform Stop Bracket ..	3	0	JADGISK
N.P.1754	Platform Stop Bracket Bolt with Spring Washer and Faced Nut	—	7	JADGOLF
N.P.1755	Rear Lamp Bracket	3	0	JADGOLAM

Tipping Sub-frame

N.P.1757	Front Cross Channel	23	0	JADGOLFAN
N.P.1758	Rear Cross Channel	23	0	JADGOLGOT
N.P.1759	Side Support Channel, L.H. ..	42	9	JADGOLHAP
N.P.1760	Side Support Channel, R.H. ..	42	9	JADGOLIND
N.P.1761	Centre Channel, L.H.	32	9	JADGOLJOK
N.P.1762	Centre Channel, R.H.	32	9	JADGOLKAB
N.P.1763	Side Bulb Angle Channel, L.H. ..	36	3	JADGOLLOM
N.P.1764	Side Bulb Angle Channel, R.H. ..	36	3	JADGOLMON
	Side Bulb Angle and Front Cross Channel Cleat	5	9	JADGOLNOS
N.P.1765	Front End Plates	1	9	JADGOLORB
N.P.1766	Centre Channel End Cleats ..	3	0	JADGOLPUN
N.P.1767	Side Support Channel Cleats ..	4	9	JADGOLRUB
N.P.1768	Side Bulb Angle End Cleats ..	2	0	JADGOLSOL

IT IS ESSENTIAL TO STATE WAGGON NUMBER WHEN ORDERING

Parts not illustrated are indicated by an Asterisk

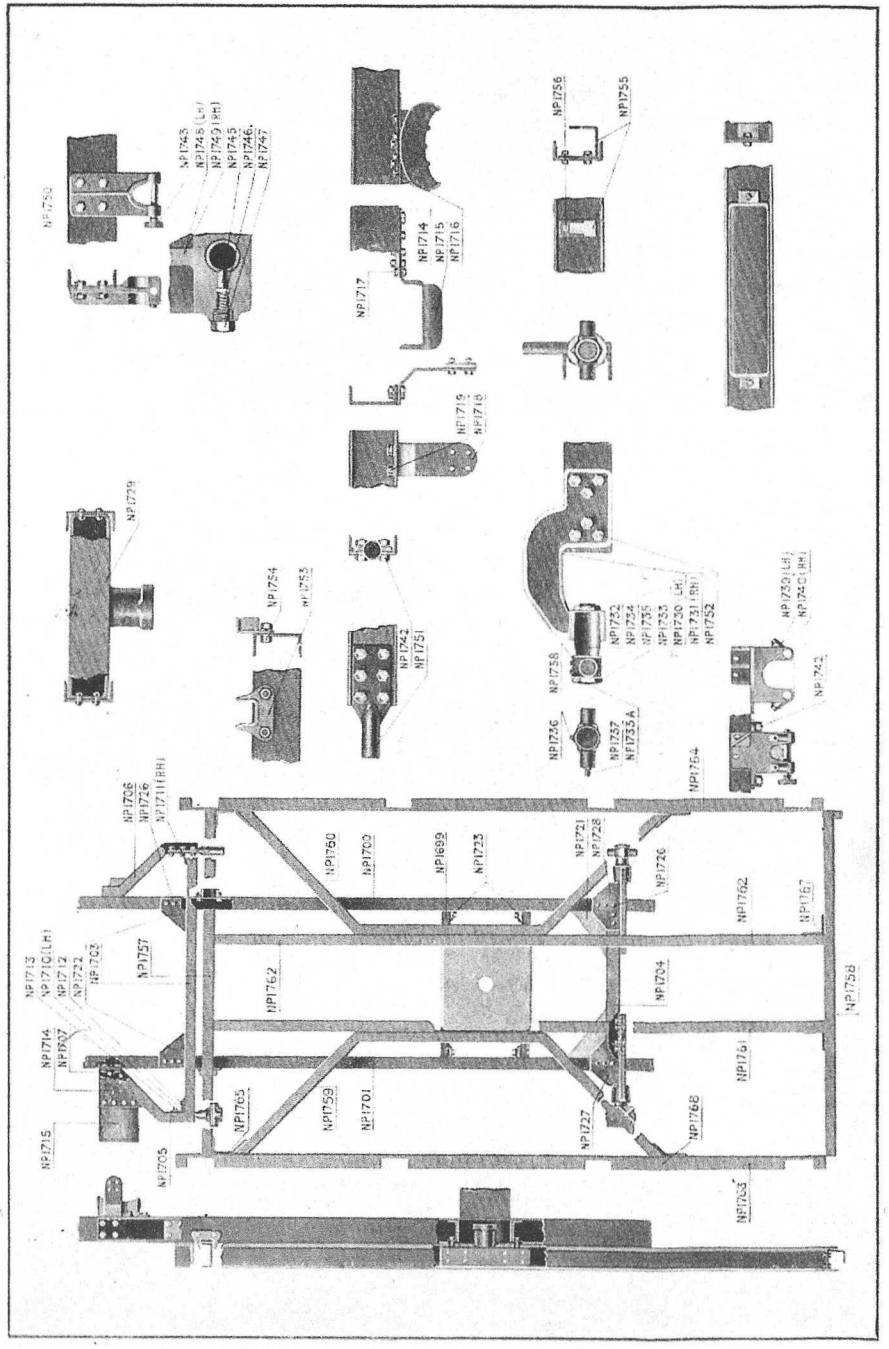

3-way Tipping Gear

List No.	Description.	Price. s.	Price. d.	Code Word.
N.P.1770	Tipping Cylinder, Brass Lined, studded	290	0	JADGULL
N.P.1771	Elbow, 1" to 1"	3	9	JADHARD
N.P.1772	Tipping Cylinder Bolt, with Spring Washer and Faced Nut, for fixing to Support Channel ..	—	6	JADHAST
N.P.1773	Stud, $\frac{5}{8}$"×1$\frac{7}{8}$", with Spring Washer and Faced Nut for fixing Covers	—	4	JADHELP
N.P.1774	Tipping Cylinder Bottom Cover Joints	2	0	JADHEND
N.P.1775	Drain Cock, $\frac{1}{4}$" Gas	1	3	JADHIPE
N.P.1776	Tipping Cylinder Top Cover ..	15	3	JADHOME
N.P.1777	Tipping Cylinder Bottom Cover ..	14	0	JADHOP
N.P.1778	Tipping Piston, studded	180	0	JADHDO
N.P.1779	Piston Rod Bearing Plate Stud, with Spring Washer and Faced Nut	—	9	JADIACT
N.P.1780	Tipping Piston Washer Plate Stud with Spring Washer and Faced Nut	—	7	JADIONIC
N.P.1781	Stud, $\frac{3}{8}$"×1", with Spring Washer and Faced Nut for fixing Piston Spring Plate	—	3	JADIUMA
N.P.1782	Tipping Piston Rod..	143	6	JADJAKE
N.P.1783	Tipping Piston Rod Bearing (Bottom Half)	18	0	JADKAST
N.P.1784	Tipping Piston Rod Bearing (Top Half)	11	0	JADKEEP
N.P.1785	Tipping Piston Rod Plate ..	9	0	JADKISS
N.P.1786	Tipping Piston Cup Washer ..	4	9	JADKORD
N.P.1787	Tipping Piston Bottom Washer ..	21	0	JADKURL
N.P.1788	Tipping Piston Spring	6	6	JADLAIN
N.P.1789	Plate Holding Piston Spring ..	1	3	JADLEAP

Mudguards. Special to 3-way Tipping Waggons

(NOT ILLUSTRATED)

List No.	Description.	Price. s.	Price. d.	Code Word.
N.P.1800	Rear Mudguards, complete with Flaps and Brackets	52	6	JAFANCY
N.P.1801	Rear Mudguard Protection Plate ..	—	6	JAFBALD
N.P.1802	Rear Mudguard Support (Rear) ..	3	0	JAFCOPT
N.P.1804	Rear Mudguard Supports	3	6	JAFFENTOR
N.P.1805	Rear Mudguard Flaps	2	0	JAFFAUNT
N.P.1807	Mudguard Centre Brackets ..	3	0	JAFHOOM
N.P.1810	Mudguard Rear Bracket, R.H. ..	11	0	JAFKODA
N.P.1811	Mudguard Rear Bracket, L.H. ..	11	0	JAFLOAM

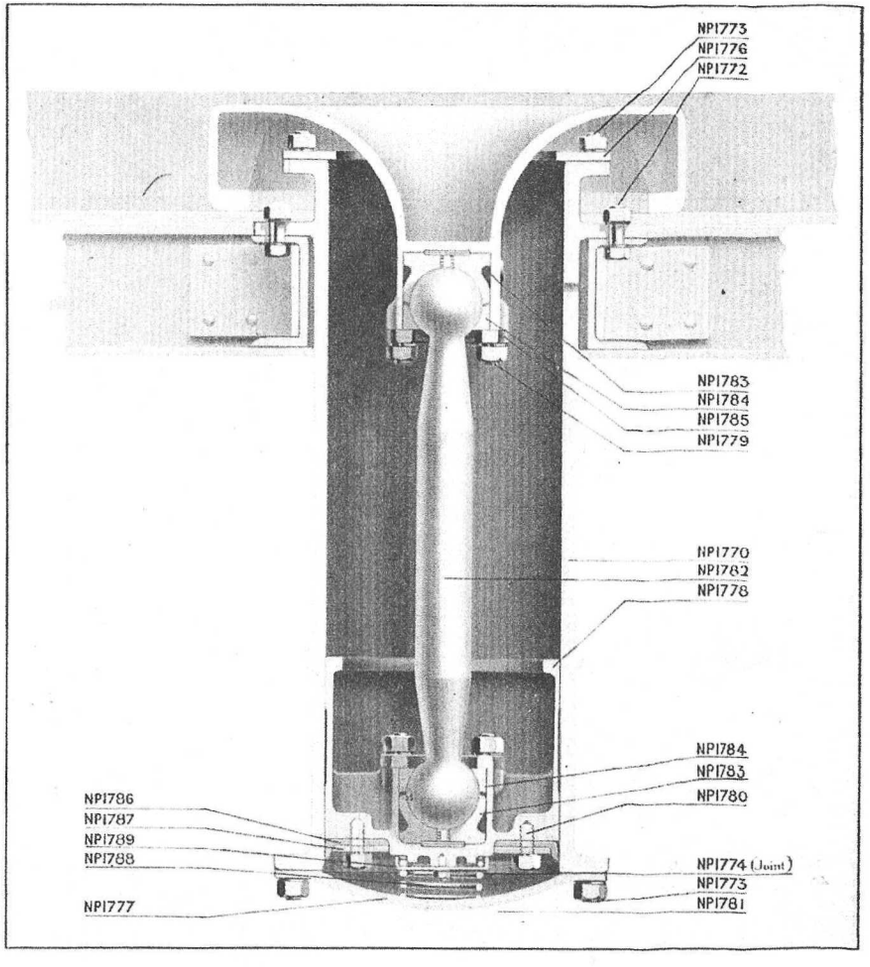

Mudguards. 3-way Tipping Waggons (*continued*)

List No.	Description.	Price. s.	Price. d.	Code Word.
N.P.1813	Mudguard Front Brackets ..	3	6	JAFNINE
N.P.1814	Rear Mudguard Centre Protection Plates	—	7	JAFOPAK
N.P.1815	Rear Mudguard, with Supports and Flaps only	34	6	JAFOQUO

For other Mudguards and Fittings, see page 62.

3-way Tipper Pipes and Pipe Fittings

(NOT ILLUSTRATED)

List No.	Description.	Price. s.	Price. d.	Code Word.
*N.P.1830	Steam to Ejector Pipe, with Coupling Nuts and Collars	5	0	JAGALLY
*N.P.1831	Injector Suction Pipe	18	6	JAGBANT
*N.P.1832	Water Lifter Pipe No. 1, Boiler End with Coupling Nuts and Collars ..	18	6	JAGCART
*N.P.1833	Water Lifter Pipe No. 2, Tank End with Coupling Nuts and Collars ..	19	0	JAGDOFF
*N.P.1834	Pump Suction Pipe No. 1, with Coupling Nut and Collar ..	15	0	JAGELTA
*N.P.1835	Pump Suction Pipe Clips	—	2	JAGFOOM
*N.P.1836	Pump Suction Pipe No. 2, with Coupling Nut and Collar ..	13	6	JAGGARD
*N.P.1837	Pump Return Pipe with Coupling Nuts and Collars	23	0	JAGHONE
*N.P.1838	Pump Return Pipe Clip, with Bolt, Nut and Washer	—	7	JAGIFIT
*N.P.1839	Exhaust Pipe No. 1 (Heater End) with Flange	23	0	JAGJOUL
*N.P.1840	Exhaust Pipe Rubber Connection, 22″ long	19	0	JAGKAPE
*N.P.1841	Exhaust Pipe No. 2 (Engine End) with Flange	18	6	JAGLOON
*N.P.1842	Fourway Cock to Tipping Cylinder, Pipe with Coupling Nuts and Collars	25	6	JAGMAST
*N.P.1843	Fourway Cock to Tipping Cylinder Pipe Clip, with Bolt, Washer and Faced Nut	2	0	JAGNEXT
*N.P.1844	Water Filter to Tipping Injector Pipe with Coupling Nuts, Collars and Washers	8	6	JAGOPAT
*N.P.1845	Return Pipe—Fourway Cock to Tank with Coupling Nuts, Collars and Washers	19	6	JAGPIES
*N.P.1846	Overflow from Tipping Injector ..	1	6	JAGRIOL
*N.P.1847	Steam to Tipping Injector with Coupling Nuts, Collars and Joint Washers	16	6	JAGSOON

For other Pipes and Fittings, see pages 56–60.

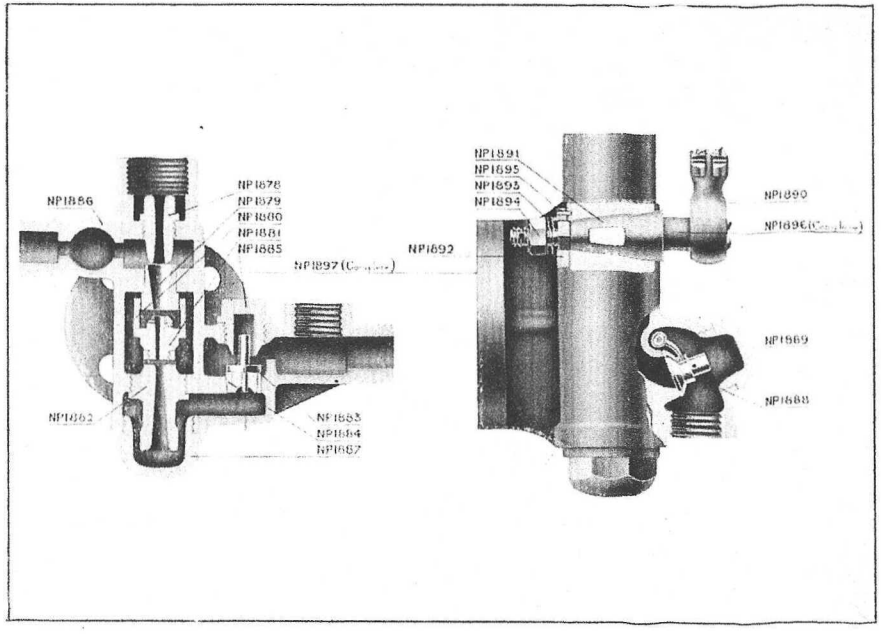

Tipping Injector

List No.	Description.		Price. s.	Price. d.	Code Word.
N.P.1876	Globe Valve, ½″ Female		15	0	JAIBAG
N.P.1877	¾″ Cock Asbestos Packed		12	3	JAICOLD
N.P.1878	Steam Nozzle	A.	3	3	JAIDOME
N.P.1879	Lifting Tube	B.	2	3	JAIFLAT
N.P.1880	Sliding Thimble	C.	1	9	JAIFORK
N.P.1881	Combining Nozzle	E.	3	0	JAIGARN
N.P.1882	Delivery Nozzle	F.	3	6	JAIGARB
N.P.1883	Delivery Back Pressure Valve	P.	1	0	JAIHOOP
N.P.1884	Delivery Back Pressure Valve Seat	Q.	1	7	JAIJIBE
N.P.1885	Delivery Back Pressure Valve Cap	R.	2	3	JAIKLOF
N.P.1886	Injector Body only	Z.	65	0	JAILBIRD
N.P.1887	Delivery End Cap	B.B.	2	6	JAIMINE
N.P.1888	Overflow Valve (complete)	C.C.	2	3	JAINOOK
N.P.1889	Overflow Valve Cap ..	D.D.	1	4	JAIPRAM
N.P.1890	Watercock Handle	H.	1	6	JAIPUNT
N.P.1891	Water Plug and Split Pin ..	J.N.	3	3	JAIQUOK
N.P.1892	Watercock Stop Washer ..	K.	—	7	JAIROUT
N.P.1893	Watercock Spring Washer	L.	—	3	JAISAUL
N.P.1894	Watercock Nut	M.	—	5	JAITIKE
N.P.1895	Watercock Stop Pin ..	O.	—	2	JAIVAMP
N.P.1896	Watercock (complete)		7	6	JAIWOOF
N.P.1897	Tipping Injector (complete) ..		140	0	JAIZACK

3-way Tipping Water Tank

List No.	Description.	Price. s.	Price. d.	Code Word.
N.P.1848	Tank, Complete with Manhole Door and Filling Covers, studded ..	310	0	JAGSPAN
N.P.1849	Coupling Nipple, 1″	1	6	JAGSRUT
N.P.1849A	Drain Plug, ¾″ Gas	—	4	JAGSTICK
N.P.1850A	Tank Internal Suction Pipe (Injector)	2	3	JAGSURM
N.P.1850B	Tank Internal Suction Pipe (Pump)	2	9	JAGSVEN
N.P.1851	Water Filter Body—studded ..	13	6	JAGSWOT
N.P.1851A	Water Filter Cover	—	9	JAGSYNE
N.P.1851B	Water Filter Mantle with ends	4	0	JAHABO
N.P.1852A	Coupling Nipple, 1¼″ Pump Suction	2	3	JAHBRAN
N.P.1852B	Coupling Nipple 1″ to 1″—Injector Suction	3	0	JAHCORN
N.P.1853	Gas Plug, 1″	2	0	JAHDARN
N.P.1854A	Shut-off Valve	2	0	JAHDRIP
N.P.1854B	Shut-off Valve Cap	3	6	JAHDUCK
N.P.1854C	Shut-off Valve Handle with Split Pins	—	7	JAHENT
N.P.1855A	Tank Strap Rubber Lining only ..	1	3	JAHFRIP
N.P.1855B	Tank Strap with Ends and Steady Bracket complete	12	9	JAHFURL
N.P.1855C	Tank Strap Steady Bracket only ..	1	6	JAHGAB
N.P.1856	Water Lifter Body, studded ..	4	6	JAHGRIN
N.P.1857	Water Lifter Nozzle	3	6	JAHINTS
N.P.1858A	Tank Filling Hole Cover with Chain and Bar and Split Pin	2	8	JAHJABE
*N.P.1858B	Water Lifter Filling Hole Cover ..	—	7	JAHKILL
*N.P.1858C	Filling Hole Cover Spring	—	2	JAHLOOM
N.P.1860	Tank Fixing Wedges, R.H. ..	—	7	JAHPRIP
N.P.1861	Tank Fixing Wedges, L.H. ..	—	7	JAHPURT
N.P.1862	Bolts, ½″ × 6″ with Washer and Nut (fixing Steady Bracket to Canopy)	—	6	JAHQUIN
*N.P.1863A	Suction Hose Pipe Guide	4	3	JAHROOT
N.P.1863B	Suction Hose Pipe Clip, complete	1	0	JAHSAND
*N.P.1863C	Hose Pipe Strainer only, complete	3	9	JAHTORN
N.P.1864	Suction Hose Pipe, complete with Strainer	98	0	JAHTREE
*N.P.1865	Water Filter, fitted complete (Pump)	29	0	JAHUCK
N.P.1865A	Water Filter, fitted complete (Injector)	29	0	JAHUFF
N.P.1866	Water Lifter, complete with Nozzle	8	6	JAHURST
N.P.1867	Water Level Gauge, complete ..	1	9	JAHVAT
*N.P.1868	Tank Suction Pipe Socket Joint ..	1	0	JAHWONT
N.P.1869	Manhole Door Joint	3	0	JAHWUSK
N.P.1870	Water Filter Joint	1	0	JAHYARK
N.P.1871	Water Filter Cover Joint	—	6	JAHZORN
N.P.1872	Tank Carrying Board, with Wedges, Screws and Hinges	19	6	JAHZUNT

Special Parts for 10ft. 9½in. Wheel Base 3-way Tipping Water Tank

(NOT ILLUSTRATED)

List No.	Description.	Price. s.	Price. d.	Code Word.
*N.P.1873	Tank Straps with Ends	10	0	JAHZATE
*N.P.1874	Tank Carrying Blocks	18	9	JAHZOIN

For other Water Tank Fittings, see pages 42—44.

IT IS ESSENTIAL TO STATE WAGGON NUMBER WHEN ORDERING

Parts not illustrated are indicated by an Asterisk

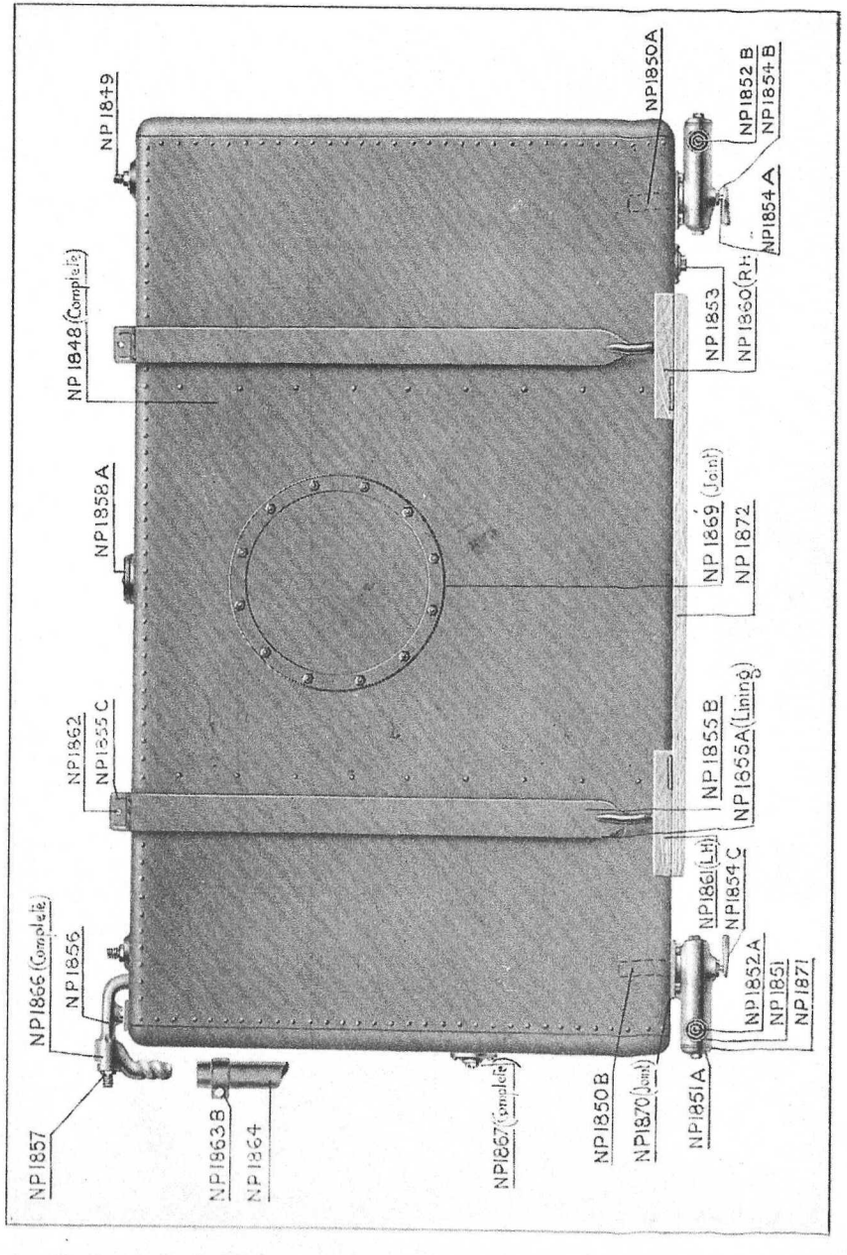

C.A.V. Lighting Sets

Belt Drive

List No.	Description.	Price. s.	Price. d.	Code Word.
*N.P.1880	Dynamo Driving Pulley	45	0	JAIGANT
*N.P.1881	Dynamo Driving Pulley Pin ..	—	1	JAIGEAL
*N.P.1882	Tail Lamp Bracket	2	0	JAIGIFT
*N.P.1883	Differential Shaft Nut	6	9	JAIGLAD
*N.P.1884	Dynamo Suspension Bracket ..	16	6	JAIGNEAT
*N.P.1885	Head Lamp Guard	3	3	JAIGONE
*N.P.1886	Head Lamp Guard Support, R.H.	2	0	JAIGRAM
*N.P.1887	Head Lamp Guard Support, L.H.	2	0	JAIGURT
*N.P.1888	Head Lamp Bracket, R.H. ..	3	6	JAIGYVE
*N.P.1889	Head Lamp Bracket, L.H. ..	3	6	JAIHAND
*N.P.1890	Dynamo Protection Plate ..	29	0	JAIHELP
*N.P.1891	Dynamo Protection Plate Support	1	9	JAIHINK
*N.P.1892	Side Lamp Distance Piece ..	—	4	JAIHOBO
*N.P.1897	Stud, $\frac{1}{2}'' \times 2\frac{1}{8}''$, fixing Head Lamps to Bracket	—	2	JAIDAUB
*N.P.1898	$\frac{1}{2}''$ Acorn Nuts	—	6	JAIFAN
*N.P.1899	$\frac{1}{2}''$ Grover Washers .. Per doz.	—	6	JAIGAIT
N.P.1902	Dynamo—D.D.6.V.—$4\frac{3}{8}''$ Circular type with solid Pulley E.S. Nett	173	0	JAIKANT
*N.P.1903	Cradle .. .. Nett	13	0	JAILODE
N.P.1904	Switchboard, 6″ B.C.3 point in Aluminium .. .. .. Nett	47	6	JAIMIN
N.P.1904A	Cut Out, "D." type 6.V. .. Nett	17	6	JAIMUT
N.P.1905	Battery, 6X, R3, V, .. Nett	87	6	JAINOOK
N.P.1906	Head Lamps, "L.S." .. Nett	37	6	JAIOST
N.P.1907	Side Lamps, "L.S.S." .. Nett	27	6	JAIPOST
N.P.1908	Tail Lamp, "L.T." .. Nett	10	6	JAIQUIT
N.P.1909	Cab Lamp, "F.L." .. Nett	12	6	JAIROAN
*N.P.1910	Belting, 5′ Length of Whittle make	16	0	JAISAM
*N.P.1911	Cable, 96′ Length of Twin Armoured Cable 14/.012	23	6	JAITAIL

IT IS ESSENTIAL TO STATE WAGGON NUMBER WHEN ORDERING

Parts not illustrated are indicated by an Asterisk

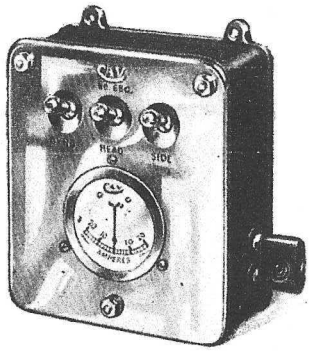

N.P.1904

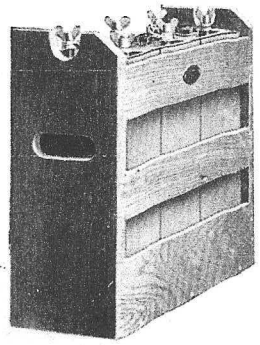

N.P.1905

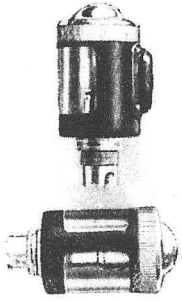

N.P.1909

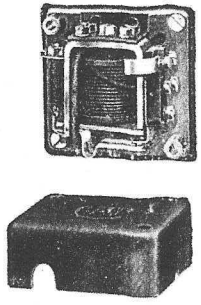

N.P.1904A

Parts not illustrated are indicated by an Asterisk

C.A.V. Lighting Sets (*continued*).

List No.	Description.	Price. s.	Price. d.	Code Word.
*N.P.1912	Cable, 65′ length of Single Armoured 35/.012	13	9	JAJIUSK
*N.P.1913	Saddles—4 Way .. Per doz.	3	6	JAJIVAN
*N.P.1914	Saddles—5 Way .. Per doz.	3	9	JAJIWOLT
*N.P.1915	Saddles—3 Way .. Per doz.	3	0	JAJIXA
*N.P.1916	Saddle—2 Way .. Per doz.	2	9	JAJIYAM
*N.P.1917	Saddles—1 Way .. Per doz.	—	9	JAJIZOP
*N.P.1918	Saddles—$\frac{3}{8}$″ for Head Lamp Cable Each	—	1	JAKJADE
*N.P.1919	Staples Insulated .. Per doz.	2	0	JAKJET
*N.P.1920	Rubber Tubing, 2′ 6″ length, $\frac{3}{16}$″i/d × $\frac{5}{16}$″o/d	1	3	JAKJILK
*N.P.1921	Brass Screws .. Per doz.	—	3	JAKJORP
*N.P.1922	Conduit Pipe, 7′ length of $\frac{3}{4}$″ ..	2	6	JAKJUTE
*N.P.1923	Conduit Pipe, 14′ length of $\frac{5}{8}$″ ..	4	0	JAKJYNE
*N.P.1924	Saddles for $\frac{3}{4}$″ Conduit Per doz.	—	4	JAKJYPO
*N.P.1925	Lighting Set—Complete—Ready for fitting. Parts as described in above List. C.A.V. make. Nett	600	0	JAKJYTA

Special Parts fitted to C.A.V. Belt Drive. Lighting Sets on Three-way Tippers only.

List No.	Description.	Price. s.	Price. d.	Code Word.
*N.P.1930	Dynamo Suspension Bracket ..	34	0	JAKKASK

Special Parts for C.A.V. Chain Drive. Standard Waggons.

List No.	Description.	Price. s.	Price. d.	Code Word.
*N.P.1940	Dynamo Driven Sprocket, $\frac{5}{8}$″ Pitch nett	15	6	JAKLAKE
*N.P.1941	Dynamo Driving Sprocket nett ..	24	6	JAKLEAF
*N.P.1942	Dynamo Protection Plate ..	19	6	JAKLION
*N.P.1943	Switchboard "6.B.C." 3 point in Aluminium .. .. Nett	47	6	JAKLOAM
*N.P.1944	Coventry Driving Chain 4″ diam. Roller, 71 links	13	4	JAKLUSK

Special Parts for C.A.V. Chain Drive. Three-Way Tipper and Six-Wheeler Waggons.

List No.	Description.	Price. s.	Price. d.	Code Word.
*N.P.1948	Dynamo Suspension Bracket ..	13	0	JAKMABS
*N.P.1949	Number Plate and Supports ..	4	0	JAKMAXT
*N.P.1953	C.A.V. Tail Lamp Bracket ..	6	9	JAKMIRK
*N.P.1955	Coventry Driving Chain, 4″ diam. Roller, 101 Links	17	9	JAKMUSE
*N.P.1956	Cranked Link No. 6, for above Chain	—	8	JAKNITE
*N.P.1957	Connecting Link No. 3A for above Chain	—	6	JAKNUP

IT IS ESSENTIAL TO STATE WAGGON NUMBER WHEN ORDERING

Parts not illustrated are indicated by an Asterisk

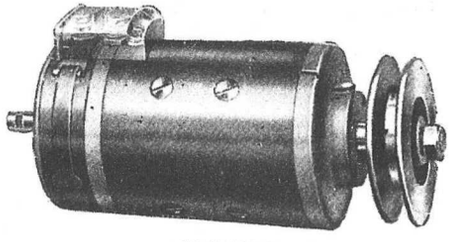

N.P.1902

N.P.1907

N.P.1908

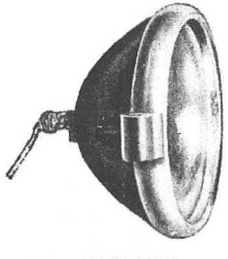

N.P.1906

Parts not illustrated are indicated by an Asterisk

Tools and Accessories, Oil, Etc.

(NOT ILLUSTRATED)

List No.	Description.	Price. s.	Price. d.	Code Word.
*N.P.1960	Facing Cutter for Byepass Valve Seat complete	27	3	JALABLE
*N.P.1961	Facing Cutter for Spindle	11	3	JALACRE
*N.P.1962	Facing Cutter Adjusting Nut ..	4	0	JALADIT
*N.P.1963	Facing Cutter only	12	0	JALAFT
*N.P.1964	Injector Check Valve Facing Cutter, complete	22	6	JALAGOT
*N.P.1965	Injector Check Valve Facing Cutter Collar	—	9	JALAINT
*N.P.1966	Injector Check Valve Feed Nut (Std. ½" Coupling Nut)	—	3	JALATAR
*N.P.1967	Injector Check Valve Cutter only	18	0	JALAKON
*N.P.1968	Injector Check Valve Guide Plug	3	6	JALALIE
*N.P.1969	Injector Main Valve Facing Cutter complete	24	0	JALAMOW
*N.P.1970	Injector Cutter Collar	—	9	JALAND
*N.P.1971	Injector Cutter only	19	6	JALAOR
*N.P.1972	Injector Guide Plug	3	6	JALAPIT
*N.P.1973	Injector Feed Nut (Std. ½" Coupling Nut)..	—	3	JALARAY
*N.P.1974	Lubricating Test Valve Body, Valve Chest Cutter complete	14	0	JALASTO
*N.P.1975	Lubricating Valve Cutter Spindle	7	0	JALATIC
*N.P.1976	Lubricating Valve Feed Nut ..	2	9	JALAUD
*N.P.1977	Lubricating Valve Cutter only ..	3	6	JALAVED
*N.P.1978	Lubricating Valve Cutter Collar ..	—	9	JALAWT
*N.P.1979	Lubricating Shut-off Valve Cutter complete	18	0	JALAXAM
*N.P.1980	Lubricating Shut-off Valve Cutter only	11	0	JALAYAL
*N.P.1981	Lubricating Shut-off Valve Feed Nut	6	3	JALAZOM
*N.P.1982	Lubricating Shut-off Valve Cutter Collar	—	9	JALBARN
*N.P.1983	Lubricating Test Valve Cutter, complete	8	0	JALBECK
*N.P.1984	Lubricating Test Valve Cutter only	6	3	JALBING
*N.P.1985	Lubricating Test Valve Feed Nut ..	—	3	JALBLOC
*N.P.1986	Lubricating Test Valve Cutter Collar	1	6	JALBOOK
*N.P.1987	Stop Valve Cutter, complete ..	36	3	JALBRIG
*N.P.1988	Stop Valve Spindle Guide ..	7	3	JALBURS
*N.P.1989	Stop Valve Cutter Spindle.. ..	11	0	JALBYNT
*N.P.1990	Stop Valve Cutter only	12	6	JALCANK
*N.P.1991	Stop Valve Cutter Pilot	4	6	JALCEPT
*N.P.1992	Stop Valve 1" Coupling Nipple ..	1	0	JALCHAK
*N.P.1993	Auxiliary Valve Cutter, complete ..	23	3	JALCIMP
*N.P.1994	Auxiliary Valve Cutter only ..	16	6	JALCLAM
*N.P.1995	Auxiliary Valve Cutter Guide ..	5	3	JALCORE
*N.P.1996	Auxiliary Valve Cutter Collar ..	1	0	JALCRAB
*N.P.1997	Auxiliary Valve ¾" Coupling Nut	—	6	JALCURK
*N.P.1998	Release Valve Cutter, complete ..	20	6	JALCYNE
*N.P.1999	Release Valve Shank	8	0	JALPABO
*N.P.2000	Release Valve Guide Collar ..	1	3	JALDENT
*N.P.2001	Release Valve Cutter only ..	11	3	JALDHOB
*N.P.2002	Release Valve ¾" Std. Hex. Nut	—	1	JALDIXY
*N.P.2003	Steam Valve Chest Reseating Cutter, complete	37	9	JALDLIE
*N.P.2004	Steam Valve Chest Cutter Spindle ..	9	3	JALDORN
*N.P.2005	Steam Valve Chest Cutter Guide ..	8	9	JALDRIB
*N.P.2006	Steam Valve Chest Cutter Clamp ..	6	6	JALDUBA
*N.P.2007	Steam Valve Cutter only	10	0	JALDYNK
*N.P.2008	Steam Valve Chest Feed Nut ..	1	9	JALEAVE
*N.P.2009	Steam Valve Chest Washer ..	1	6	JALEBON
*N.P.2010	Exhaust Valve Chest Reseating Cutter, complete	42	3	JALECHO

Tools and Accessories, Oil, Etc. *(continued)*.

(NOT ILLUSTRATED)

List No.	Description.	Price. s.	Price. d.	Code Word.
*N.P.2011	Exhaust Valve Chest Cutter Clamp	6	6	JALEDDY
*N.P.2012	Exhaust Valve Chest Feed Nut ..	1	9	JALEETE
*N.P.2013	Exhaust Valve Chest Washer ..	1	6	JALEFT
*N.P.2014	Exhaust Valve Chest Cutter only	12	6	JALEGGS
*N.P.2015	Exhaust Valve Chest Cutter Spindle	9	9	JALEHS
*N.P.2016	Exhaust Valve Chest Cutter Guide	10	3	JALEJOB
*N.P.2017	Steam Valve Chest Refacing Cutter, complete	39	6	JALEKIP
*N.P.2018	Steam Valve Chest Cutter Guide ..	8	9	JALELLY
*N.P.2019	Steam Valve Chest Cutter Clamp ..	6	6	JALEMIN
*N.P.2020	Steam Valve Chest Feed Nut ..	1	9	JALEND
*N.P.2021	Steam Valve Chest Washer ..	1	6	JALEON
*N.P.2022	Steam Valve Chest Cutter only ..	11	0	JALEPRE
*N.P.2023	Steam Valve Chest Cutter Spindle	10	0	JALEROS
*N.P.2024	Exhaust Valve Chest Refacing Cutter	43	6	JALESTY
*N.P.2025	Exhaust Valve Chest Cutter Clamp	6	6	JALETTA
*N.P.2026	Exhaust Valve Chest Feed Nut ..	1	9	JALEUR
*N.P.2027	Exhaust Valve Chest Washer ..	1	6	JALEVY
*N.P.2028	Exhaust Valve Chest Cutter Guide	10	3	JALEWEL
*N.P.2029	Exhaust Valve Chest Cutter only	13	0	JALEXOR
*N.P.2030	Exhaust Valve Chest Cutter Spindle	10	6	JALEYES
*N.P.2031	Safety Valve Seat Cutter, complete	34	3	JALEZRA
*N.P.2032	Safety Valve Seat Cutter Spindle	12	6	JALFARM
*N.P.2033	Safety Valve Seat Cutter only ..	14	6	JALFEST
*N.P.2034	Safety Valve Seat Nut	—	6	JALFIND
*N.P.2035	Safety Valve Seat Adjusting Nut	6	9	JALFLOW
*N.P.2036	Feed Check Valve Seat and Pump	—	—	JALFORD
*N.P.2037	Valve Chest Cutter, complete ..	33	9	JALFREW
*N.P.2038	Valve Chest Facing Cutter only ..	22	9	JALFURL
*N.P.2039	Valve Chest Adjusting Nut ..	6	6	JALFYNE
*N.P.2040	Valve Chest Pilot	4	6	JALGAIN
*N.P.2041	Water Filter Shut-off Valve Seat Feed Shut-off Valve Seat Cutter, complete	25	9	JALGELD
*N.P.2042	Feed Shut-off Valve Seat Cutter only	19	3	JALGIBE
*N.P.2043	Feed Shut-off Valve Seat Cutter Guide	6	6	JALGLOB
*N.P.2044	Injector Check Valve Extracting Tool, complete	9	6	JALGORE
*N.P.2045	Injector Check Valve Extractor Spindle	8	6	JALGRAN
*N.P.2046	Injector Check Valve Extractor Bush	1	0	JALGURM
*N.P.2047	Feed Pump Byepass Valve Seat Extracting Tool, complete ..	12	0	JALGWAN
*N.P.2048	Feed Pump Extractor Bush ..	2	3	JALGYVE
*N.P.2049	Feed Pump Extractor Spindle ..	9	9	JALHAGO
*N.P.2050	Chain Pinion Extractor	32	6	JALHEDA
*N.P.2051	Chain Pinion Extractor Beam ..	16	6	JALHIME
*N.P.2052	Chain Pinion Extractor Arm ..	13	0	JALHOPT
*N.P.2053	Chain Pinion Extractor	3	0	JALHURL
*N.P.2054	Safety Valve Seat Extracting Tool	28	9	JALHYNK
*N.P.2055	Safety Valve Seat Bracket.. ..	6	3	JALIBAT
*N.P.2056	Safety Valve Seat Spindle.. ..	8	6	JALICIN
*N.P.2057	Safety Valve Seat Expanding Jaw..	10	0	JALIDOT
*N.P.2058	Safety Valve Seat Nuts	2	0	JALIEST
*N.P.2059	Steam Valve Chest Reseating Cutter, complete	30	6	JALIFER
*N.P.2060	Exhaust Valve Chest Reseating Cutter, complete	30	6	JALIGHT
*N.P.2061	Exhaust Valve Chest Reseating Arbor	9	6	JALIHB
*N.P.2062	Exhaust Valve Chest Reseating Cutter only	19	0	JALIKEN

Tools and Accessories, Oil, Etc. (*continued*).

(NOT ILLUSTRATED)

List No.	Description.	Price. s.	Price. d.	Code Word.
*N.P.2063	Exhaust Valve Chest Reseating Nut	—	9	JALILLO
*N.P.2064	Exhaust Valve Chest Reseating Spring	—	6	JALIMB
*N.P.2065	Exhaust Valve Chest Reseating Handle	—	9	JALINK
*N.P.2066	Steam and Exhaust Valve Chest Reseating Cutter, complete ..	41	6	JALIONT
*N.P.2067	Steam and Exhaust Valve Chest Reseating Spindle Guide ..	9	9	JALIPRO
*N.P.2068	Steam and Exhaust Valve Chest Reseating Feed Nut	2	0	JALIRAN
*N.P.2069	Steam and Exhaust Valve Chest Reseating Clamp	6	6	JALISLE
*N.P.2070	Steam and Exhaust Valve Chest Reseating Distance Collar ..	1	0	JALITTS
*N.P.2071	Steam and Exhaust Valve Chest Reseating Spindle..	9	3	
*N.P.2072	Steam and Exhaust Valve Chest Reseating Cutter only	13	0	JALIVEN
*N.P.2073	Steam and Exhaust Valve Chest Refacing Cutter, complete ..	42	9	JALIWON
*N.P.2074	Steam and Exhaust Valve Chest Refacing Spindle Guide	9	9	JALIXIA
*N.P.2075	Steam and Exhaust Valve Chest Refacing Feed Nut	2	0	JALIZON
*N.P.2076	Steam and Exhaust Valve Chest Refacing Clamp	6	6	JALJAIN
*N.P.2077	Steam and Exhaust Valve Chest Refacing Distance Collar ..	1	0	JALJESE
*N.P.2078	Steam and Exhaust Valve Chest Refacing Cutter Spindle ..	9	9	JALJIOK
*N.P.2079	Steam and Exhaust Valve Chest Refacing Cutter only	13	9	JALJOKO
*N.P.2080	Tool for Grinding in Steam Valve	17	0	JALJUTA
*N.P.2081	Tool for Grinding in Steam Valve Spindle	6	0	JALJYLT
*N.P.2082	Tool for Grinding in Steam Valve Nut	2	3	JALKARM
*N.P.2083	Tool for Grinding in Steam Valve Expanding Sleeve..	6	9	JALKEST
*N.P.2084	Tool for Grinding in Auxiliary Valve Handle	2	0	JALKHAR
*N.P.2085	Tool for Grinding in Exhaust Valve	18	0	JALKISS
*N.P.2086	Tool for Grinding in Exhaust Valve Spindle	6	6	JALKLEP
*N.P.2087	Tool for Grinding in Exhaust Valve Nut	2	3	JALKNOW
*N.P.2088	Tool for Grinding in Exhaust Valve Expanding Sleeve..	7	9	JALKORP
*N.P.2089	Tool for Grinding in Exhaust Valve Handle	2	0	JALKULT
*N.P.2090	Boiler Filler	3	6	JAPGOY
*N.P.2091	Fire Shovel	2	6	JAPGUNG
*N.P.2092	Fire Slicer	2	6	JAPHAMP
*N.P.2093	Fire Pricker	2	6	JAPHARM
*N.P.2094	Hammer and Shaft complete ..	2	0	JAPHIDE
*N.P.2095	Hammer Shaft only	—	6	JAPHOUR
*N.P.2096	Flat Chisel	2	6	JAPHUN
*N.P.2097	$\frac{5}{16}$" and $\frac{3}{8}$" D.E. Spanner	—	7	JAPIPE
*N.P.2098	$\frac{3}{8}$" and $\frac{7}{16}$" D.E. Spanner	—	9	JAPTAW
*N.P.2099	$\frac{1}{2}$" and $\frac{9}{16}$" D.E. Spanner	1	0	JAPTEM
*N.P.2100	$\frac{5}{8}$" and $\frac{3}{4}$" D.E. Spanner	1	4	JAPZIME
*N.P.2101	$\frac{7}{8}$" and 1" D.E. Spanner	2	6	JAPZOB
*N.P.2102	$1\frac{1}{8}$" and $1\frac{1}{4}$" D.E. Spanner.. ..	3	9	JAPZUMP

Tools and Accessories, Oil, etc. (*continued*)

(NOT ILLUSTRATED)

List No.	Description.	Price. s.	Price. d.	Code Word.
*N.P.2103	$1\frac{1}{2}$" and $1\frac{5}{8}$" D.E. Spanner. ..	7	0	JAPKANE
*N.P.2104	$\frac{1}{2}$" Ring Keys	1	0	JAPKEEP
*N.P.2105	$\frac{5}{8}$" and $\frac{3}{4}$" Box Key..	3	9	JAPKIND
*N.P.2106	Podger for $\frac{5}{8}$" and $\frac{3}{4}$" Box Key ..	3	0	JAPKOP
*N.P.2107	$\frac{1}{2}$" Box Key	2	0	JAPKURL
*N.P.2108	$\frac{7}{8}$" Box Key (Connecting Rod Bolts)	4	0	JAPLAMB
*N.P.2109	Valve Push Rod Spanner ..	1	3	JAPLAND
*N.P.2110	Check Valve Plug Spanner ..	2	9	JAPLAZE
*N.P.2111	Acetylene Head Lamp .. Nett.	70	0	JAPLEEP
*N.P.2112	Side Lamps (Oil) .. .. ,,	41	3	JAPLENT
*N.P.2113	Tail Lamp (Oil) .. .. ,,	20	0	JAPLION
*N.P.2114	Cab Lamp (Oil) .. .. ,,	10	0	JAPLIPS
*N.P.2115	Horn .. .. ,,	19	0	JAPLOADS
*N.P.2116	Front and Rear Axle Nut Ring Key	8	6	JAPLOAN
*N.P.2117	Grease Pump complete	14	0	JAPLOCK
*N.P.2118	$\frac{1}{4}$ Gallon Flasks Oil or Paraffin ..	3	9	JAPLOD
*N.P.2119	$\frac{1}{2}$ Pint Oil Feeder	2	6	JAPLOGS
*N.P.2120	$1\frac{1}{8}$" Copper Washers	—	2	JAPLOMPS
*N.P.2121	$\frac{11}{16}$" Copper Washers	—	1	JAPLOOK
*N.P.2122	$\frac{5}{16}$" Copper Washers Per doz.	—	6	JAPLORD
*N.P.2123	Asbestos Cord .. Per lb.	1	2	JAPLOOT
*N.P.2124	1 sq. ft. Jointing Material ..	2	6	JAPLOTS
*N.P.2125	Leather Strap (for Suction Hose Pipe)	2	6	JAPLUNT
*N.P.2126	Chain Pinion Ring Key	12	6	JAPLUZ
*N.P.2127	Flat Spanner for Hot Water Injector Overflow Valve	1	0	JAPMAMP
*N.P.2128	Box Spanner for Hot Water Injector Valve Spindle	1	6	JAPMAN
*N.P.2129	Box Spanner for Hot Water Injector Auxiliary Steam Nozzle	2	0	JAPMAZE
*N.P.2130	Driving Mirror .. .. Nett.	17	0	JAPMEAN
*N.P.2131	Windscreen complete with Extension and Protection Plate .. Nett.	256	6	JAPMENT
*N.P.2132	Grease "Sentinel" 56 lb. Keg. ..	—	—	JAPNIGHT
*N.P.2133	Grease "Sentinel" 28 lb. Keg. ..	—	—	JAPNIPE
*N.P.2134	Grease "Sentinel" 10 lb. Keg. ..	—	—	JAPNODAL
*N.P.2135	Oil Cylinder—40 gallon barrels ..	—	—	JAPRAMP
*N.P.2136	Oil Cylinder—5 gallon drum ..	—	—	JAPRICO
*N.P.2137	Oil Crank Case—40 gallon barrel..	—	—	JAPRUSK
*N.P.2138	Oil Crank Case—5 gallon drum	—	—	JAPRYAN
*N.P.2139	Windscreen Heat Protector only. Nett.	10	0	JAPSAMP
*N.P.2140	Windscreen only .. .. Nett.	215	0	JAPSEIM
*N.P.2141	Windscreen Extension only. Nett.	30	0	JAPSIME
*N.P.2142	Boiler Flexible Cleaning Pipe ..	30	0	JAPTAPE
*N.P.2143	84 Link Driving Chain, $1\frac{3}{4}$" Pitch (for 11, 13 and 15 Tooth Pinions) ..	140	11	JAPVAD
*N.P.2144	86 Link Driving Chain, $1\frac{3}{4}$" Pitch (for 17 and 19 Tooth Pinions)..	144	3	JAPVET
*N.P.2145	Inner Link, $1\frac{3}{4}$" Pitch	2	6	JAPWAX
*N.P.2146	Outer Link, $1\frac{3}{4}$" Pitch	1	3	JAPWED
*N.P.2147	Cranked Link, $1\frac{3}{4}$" Pitch	4	2	JAPWINE
*N.P.2148	Connecting Link, $1\frac{3}{4}$" Pitch ..	5	0	JAPWON
*N.P.2149	Bolt with Nut & Split Pin, $1\frac{3}{4}$" Pitch	2	1	JAPWUSE
*N.P.2150	74 Link Driving Chain, 2" Pitch (for 11 and 13 Tooth Pinions)..	143	11	JAPYAN
*N.P.2151	76 Link Driving Chain, 2" Pitch (for 15 and 17 Tooth Pinions)..	147	10	JAPYAME
*N.P.2152	Inner Link, 2" Pitch	2	11	JAPYED
*N.P.2153	Outer Link, 2" Pitch	1	5	JAPYELL
*N.P.2154	Cranked Link, 2" Pitch	4	10	JAPYIX
*N.P.2155	Connecting Link, 2" Pitch.. ..	5	11	JAPYOT
*N.P.2156	Bolt with Nut & Split Pin, 2" Pitch	2	5	JAPYOUR

Venturi Funnel with Combined Blower and Blast Pipe
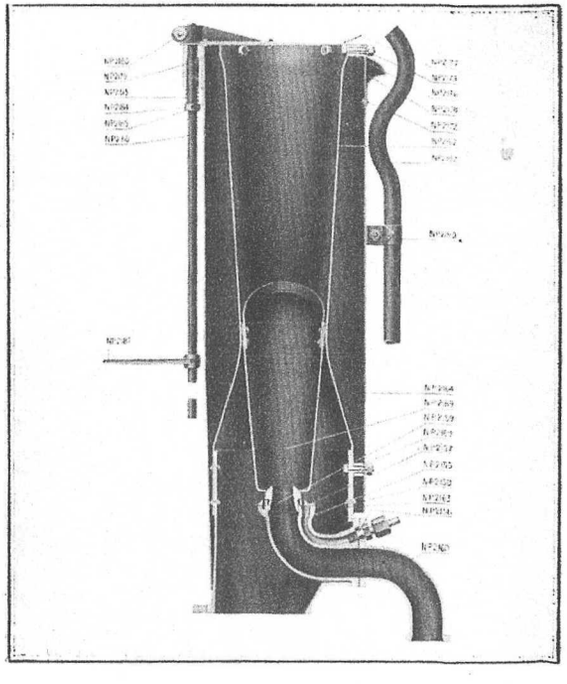
List No.	Description.	Price. s.	Price. d.	Code Word.
N.P.2150	Funnel Base, Studded	41	0	JEDART
*N.P.2151	$\frac{1}{2}''\times 2\frac{3}{8}''$ Studs fixing Blast Pipe. Each	—	2	JEDBAST
*N.P.2154	$\frac{1}{4}''$ Dowels fixing Blast Pipe to Funnel Base	—	3	JEDELD
N.P.2155	Combined Blast and Blower Pipe ..	20	9	JEDFAST
N.P.2156	$\frac{3}{8}''$ Coupling Nipple for Blower Pipe	2	0	JEDGOAD
N.P.2157	Blower Pipe Nozzle Plate ..	2	0	JEDHANT
N.P.2158	Blower Pipe Nozzle Peg	—	3	JEDIBAT
N.P.2159	$1\frac{3}{8}''$ Blast Nozzle	3	9	JEDJOCK
N.P.2159A	Combined Blast and Blower Pipe, complete with Nozzle, Plate and Coupling Nipple	31	0	JEDKOLA
N.P.2160	Blast Pipe Bend	10	9	JEDLORE
N.P.2162	Venturi Funnel (Inner Casing only)	27	6	JEDMOON
N.P.2163	$\frac{3}{8}''\times\frac{7}{8}''$ Rivets fixing Funnel to Base .. .. Per doz.	—	2	JEDNAPE
N.P.2164	Funnel Outer Casing with Coping and Boss	40	6	JEDOANT
*N.P.2169	Outer Casing Distance Piece ..	—	4	JEDROOK
N.P.2170	Funnel Coping with Boss ..	16	3	JEDSORT
N.P.2176	Distance Piece for Venturi Funnel	—	4	JEDWONT
N.P.2177	Funnel Damper with Boss.. ..	7	9	JEDYOND
N.P.2183	Funnel Damper Shaft Spring ..	—	1	JEFCAKE
N.P.2184	Funnel Damper Shaft Collar ..	—	2	JEFDIG
N.P.2185	$\frac{3}{16}''$ Taper Pin for Shaft Collar Per doz.	1	0	JEFGAG
N.P.2186	Funnel Damper Shaft	1	6	JEFHOD
N.P.2187	Funnel Damper Handle	1	3	JEFIPAK
N.P.2188	$\frac{3}{16}''$ Taper Pin for Damper Handle Per doz.	1	0	JEFJAPE
N.P.2189	Spark Arrester, complete	11	6	JEFKON
N.P.2190	Safety Valve Discharge Pipe Band and Clip, with Bolt and Nut ..	9	6	JEFLIPT
N.P.2191	Safety Valve Discharge Pipe ..	25	6	JEFMONPE
N.P.2192	Funnel with Base, combined Blast and Blower Pipe, Nozzle and Damper Gear complete	190	0	JEFNICE